solenoid control valve (energize to open)

installation, operating, and maintenance instructions

model 115-4

GENERAL DESCRIPTION

The OCV Model 115-4 solenoid control valve is designed to open or close in response to an electrical signal. It consists of the following components:

1. **Model 65 Basic Valve**, a hydraulically-operated, diaphragm-actuated, globe or angle valve with an elastomer-on-metal seal.
2. **Model 452 Solenoid Pilot** a three-way, electrically-operated valve.
3. **Model 330** or **Model 3600 Three-Way Auxiliary Pilot,** a three-way, hydraulically-operated valve.
4. **Model 141-2** Needle Valve which controls the opening and closing speed of the main valve.
5. **Model 159 Y-Strainer** (standard on water service valves) or **Model 123 Inline Strainer** (standard on fuel service valves). The strainer protects the pilot system from solid contaminants in the line fluid.
6. Two **Model 141-4 Ball Valves** (standard on water service valves, optional on fuel service valves), useful for isolating the pilot system for maintenance or troubleshooting.

At user option, the 115-4 may also be equipped with the following:

1. Model 155 Visual Indicator.
2. Model 150 Limit Switch Assembly (includes visual indicator).
3. Model 141-3 Flow Control Valve, set up as a closing speed control or as an opening speed control. Or two 141-3's can be provided to give separate, independent control of both closing and opening speeds.
4. Manual override on solenoid pilot.

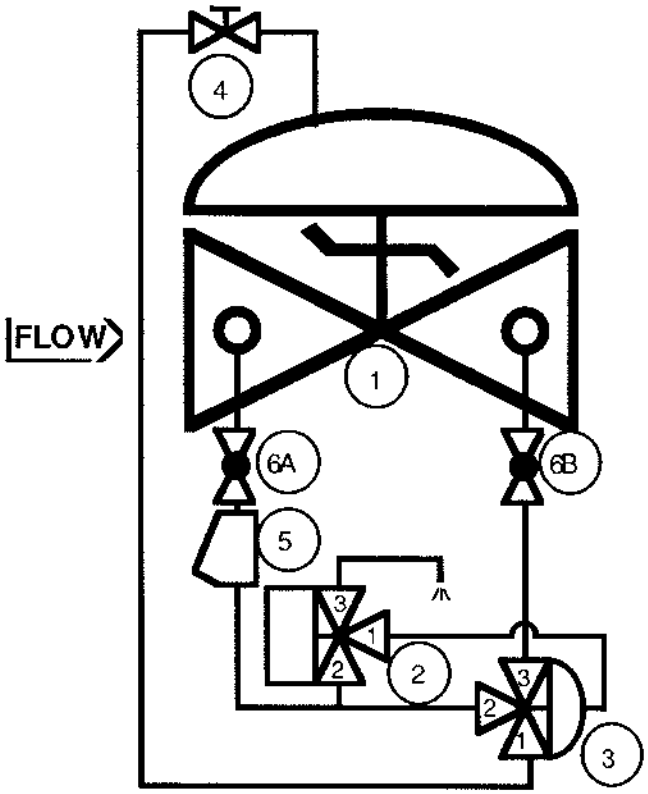

OCV Control Valves
7400 East 42nd Place / Tulsa, Oklahoma 74145 -4744 USA / (918) 627-1942 / 888-OCV-VALV / FAX 918-622-8916
e-mail: sales@controlvalves.com / website: www/controlvalves.com

5. Three-way pilot exhaust to atmosphere. Enables valve to open fully regardless of line pressure differential. (Available on water service valves only.)

THEORY OF OPERATION **(refer to schematic diagram):**

Operation of the 115-4 is extremely simple. Energizing the coil of the solenoid pilot connects port "2" (supply) to port "1" (common), which pressurizes the diaphragm chamber of the three-way auxiliary pilot. This pilot shifts to relieve pressure from the diaphragm chamber of the main valve. Thus, the main valve opens.

Conversely, deenergizing the coil of the solenoid pilot connects port "1" (common) and port "3" (exhaust), which vents the diaphragm chamber of the three-way auxiliary pilot. The pilot shifts to route full inlet pressure to the diaphragm chamber of the main valve. Thus, the main valve closes fully.

INSTALLATION

The 115-4 is furnished fully factory-assembled and ready for installation at the appropriate point in the system. The user is referred to the Basic Valve section of this manual for full installation details.

Once the main valve is installed, the solenoid pilot is wired into the control system. This is a simple two-wire hookup.

STARTUP AND ADJUSTMENT

The following procedures should be followed in the order presented in order to effect an initial statup of the 115-4.

1. Make sure the coil of the solenoid pilot is deenergized.
2. Turn the adjusting screw of the needle valve fully **clockwise**, then back it off **three full turns**.
3. Start the pump, or otherwise start the system flowing. The main valve will at this time be fully closed.
4. Carefully loosen one of the pipe plugs in the main valve bonnet until fluid appears around the threads. When only clear fluid (no air) is discharging, retighten the plug.
5. Energize the solenoid pilot. Observe that the main valve opens.
6. Deenergize the solenoid pilot and observe that the valve closes.
7. Open and close the valve several times electrically as required to set needle valve for proper opening and closing speed. **Clockwise** adjustment of the needle valve **decreases** response speed; **counter-clockwise** adjustment **increases** response speed. CAUTION: Never close the needle valve fully. To do so will prevent the valve from operating.

MAINTENANCE

Due to the simplicity of design of the 115-4, required maintenance is minimal. However, the following checks, periodically performed, can do much to keep the valve operating properly and efficiently.

1. Check for chipped or peeling paint. Touch up as required.
2. Check for leaks at fittings and around flanges and connections. Tighten as required.
3. Check for frayed or loose electrical connections.
4. If the valve is equipped with a Y-strainer, check the screen for buildup of solid material. Clean as required. This point is most important, as a clogged strainer can keep the valve from closing. On new installations, it is recommended that the strainer be checked every day or two until experience dictates a greater or lesser interval. Strainer maintenance is covered in detail on a special page later in this manual.

TROUBLESHOOTING

In the event of malfunction of the 115-4, the following guide should enable the technician to isolate the specific cause of the problem and take the appropriate corrective action.

A. MAIN VALVE FAILS TO OPEN:

1. Valve closed upstream or downstream of the 115-4. Open as required.

2. Downstream pilot system ball valve closed. Open as required.

3. Solenoid not energized. Check electrical system.

4. Needle valve fully closed. See Adjustment instructions.

5. Solenoid pilot stuck closed or coil burned out. See Solenoid Valve section of this manual.

6. Stem of three-way auxiliary pilot binding or seat deteriorated. Disassemble pilot and determine cause. See 330 or 3600 section of this manual.

7. Stem of main valve binding. Disassemble valve and determine cause. See the Model 65 Basic Valve section of this manual.

B. MAIN VALVE FAILS TO CLOSE:

1. Upstream pilot system ball valve closed. Open as required.

2. Solenoid not deenergized. Check electrical system.

3. Strainer clogged. Clean as required.

4. Close downstream pilot system ball valve.

   a. If main valve closes, proceed to Step 5.

   b. If main valve remains open, proceed to Step 7.

5. Solenoid pilot stuck open. See Solenoid Valve section of this manual.

6. Three-way auxiliary pilot diaphragm ruptured, stem binding or seat deteriorated. Disassemble pilot and determine cause. See 330 or 3600 section of this manual.

7. Close both pilot system ball valves and loosen a pipe plug in the main valve bonnet. A **continuous** discharge of fluid from the loosened plug indicates that the main valve diaphragm is ruptured. Replace diaphragm. See the Model 65 Basic valve section of this manual.

NOTE: Certain valves, predominantly those in fuel service, are assembled "fail closed." In this case, a ruptured diaphragm would keep the valve from opening, rather than keep it from closing. To determine which type you have, examine the "bridge mark" cast into the side of the main valve body and compare it with the diagram below. If the bridge mark slants **downward** on the upstream end, the valve is "fail closed." If the bridge mark slants **upward** on the upstream end, the valve is "fail open."

8. Main valve stem binding or object in valve. Disassemble valve and determine cause. See Basic Valve section of this manual.

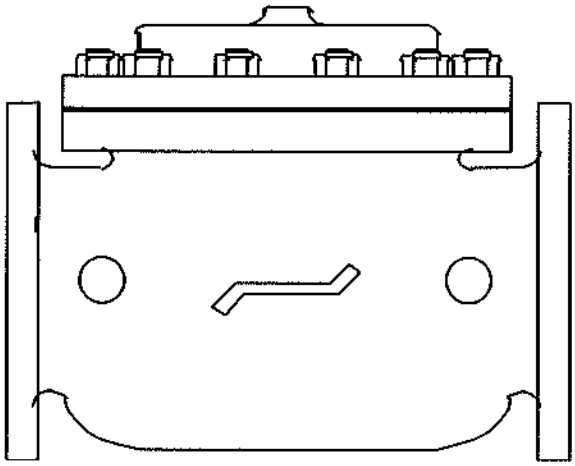

installation, operating, and maintenance instructions

series 65

basic control valve

GENERAL DESCRIPTION

The OCV Series 65 is a hydraulically-operated, diaphragm-actuated valve. It is available in either a globe (Model 65) or angle (Model 65A) configuration. The diaphragm is nylon-fabric bonded with synthetic rubber and forms a sealed chamber in the upper portion of the valve, separating operating pressure from line pressure. An elastomeric seat disc forms a tight seal with the valve seat when pressure is applied above the diaphragm.

FUNCTIONAL DESCRIPTION

Because the Series 65 is a hydraulically operated valve, it requires a minimum line pressure of approximately 5 psig in order to function. The valve functions on a simple principle of pressure differential. The line pressure at the inlet of the valve is bypassed through the pilot control piping to the diaphragm chamber of the valve. This pressure, together with the valve spring, works against the pressure under the valve seat. Because the effective area of the diaphragm is greater than that of the seat, the valve is held tightly closed. As the controlling pilot(s) allow the pressure to bleed off the diaphragm chamber, the two opposing pressures begin to balance and the valve will begin to open. The valve can be used to perform a simple on-off function, or with the proper pilot system, a modulating, or regulating function.

In cases where the line fluid is unusually dirty, or is otherwise unsuitable for operating the valve, an independent operating pressure source may be employed. The pressure available from such a source must be equal to, or greater than, line pressure.

INSTALLATION

In order to insure safe, accurate and efficient operation of the OCV control valve, the following list of checkpoints and procedures should be followed when installing the valve.

1. Make a careful visual inspection of the valve to insure that there has been no damage to the external piping, fittings or controls. Check that all fittings are tight.
2. Thoroughly flush all interconnecting piping of chips, scale and foreign matter prior to mounting the valve.
3. Install the valve in the line according to the flow arrow on the inlet flange. The arrow should point downstream.
4. Allow sufficient room around the valve for ease of adjustment and maintenance service.

In addition, it is highly recommended that:

1. Isolation valves (eg., gate or butterfly) be installed on the inlet and discharge sides of the valve to facilitate isolating the valve for maintenance.
2. Pressure gauges be installed at the inlet and outlet sides of the valve to provide monitoring of the valve during initial start-up and during operation. The body side ports, if unused by the pilot system, provide a convenient connection for the gauges.
3. All valves larger than 6" be installed horizontally, i.e., with the bonnet pointed up, for ease of adjustment and maintenance servicing.

MAINTENANCE

The OCV control valve requires no lubrication and a minimum of maintenance. However, a periodic inspection should be established to determine how the fluid being handled is affecting the efficiency of the valve. In a water system, for example, the fluid velocity as well as the substances occurring in natural waters, such as dissolved minerals and suspended particles, vary in every installation. The effect of these actions or substances must be determined by inspection. It is recommended that an annual inspection, which includes ex-

OCV Control Valves
7400 East 42nd Place / Tulsa, Oklahoma 74145 -4744 USA / (918) 627-1942 / 888-OCV-VALV / FAX 918-622-8916
e-mail: sales@controlvalves.com / website: www/controlvalves.com

amination of the valve interior, be conducted. Particular attention should be paid to the elastomeric parts, i.e., the diaphragm and seat disc. Any obviously worn parts should be replaced.

REPAIR PROCEDURES

In the event of malfunction of the OCV control valve, troubleshooting should be conducted according to the procedures outlined for the specific model of valve. Then, if those steps indicate a problem with the main valve, this section will outline the procedures necessary to correct the problem.

Problems with the main valve can be classed in three basic categories:

1. VALVE FAILS TO OPEN
   a. Diaphragm damaged* - See Procedure A
   b. Stem binding - See Procedure B
2. VALVE FAILS TO CLOSE
   a. Diaphragm damaged* - See Procedure A
   b. Stem binding - See Procedure B
   c. Object lodged in valve - See Procedure B
3. VALVE OPENS AND CLOSES BUT LEAKS WHEN CLOSED
   a. Seat disc damaged - See Procedure C
   b. Seat ring damaged - See Procedure D

   **A diaphragm failure can prevent the valve from either opening or closing, depending on the flow direction. Most water service valves flow "under the seat", in which case a diaphragm failure will keep the valve from closing. On the other hand, most fuel service valves flow "over the seat", in which case a diaphragm failure will keep the valve from opening. To determine which you have, examine the bridge mark cast into the side of the valve body, then compare it with the figures below.*

PROCEDURE A : DIAPHRAGM REPLACEMENT

1. Isolate the valve from the system by closing upstream amd downstream block valves.
2. Loosen one of the tubing connections on the bonnet. Allow any residual pressure to bleed off.
3. Remove all tubing connected at the bonnet.
4. Remove the bonnet nuts.
5. Remove the bonnet. If the bonnet sticks in place, it may be loosened by rapping sharply around its edge with a *rubber-headed* mallet. *NOTE: 8" and larger valves are equipped with eye bolts through which a chain can be fastened to aid in lifting the bonnet.*
6. Remove the spring.
7. Remove the diaphragm plate capscrews and the diaphragm plate.
8. Remove the old diaphragm.
9. Making sure the dowel pin holes are in the proper location, place the new diaphragm over the studs and press down until it is flat against the body and spool.
10. Replace the diaphragm plate and the diaphragm plate capscrews.
11. Tighten all diaphragm plate capscrews snugly.
12. Replace the spring.
13. Replace the bonnet and reinstall the bonnet nuts.
14. Tighten the bonnet nuts snugly using a criss-cross tightening pattern.
15. Reinstall the control tubing.
16. Reopen the upstream and downstream block valves.
17. Before placing the valve back in service, perform the air bleed procedure described in the first section of this manual.

PROCEDURE B: CORRECTION OF BINDING STEM

1. Perform Steps 1 thru 6 of Procedure A, above.
2. Remove the spool assembly from the valve. *NOTE:*

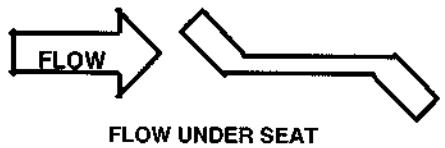

FLOW UNDER SEAT
DIAPHRAGM FAILURE = VALVE FAILS TO CLOSE

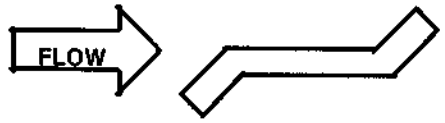

FLOW OVER SEAT
DIAPHRAGM FAILURE = VALVE FAILS TO OPEN

On smaller valves, this can be accomplished simply by grasping the stem and pulling upward. Valves 6" and larger have the top of the stem threaded to accept an eyebolt to aid in lifting the spool out of the body. 6" thru 12" valves are threaded 3/8-16. 14" and 16" valves are threaded 5/8-11.

3. Carefully examine both ends of the stem for deep scratches, scoring or buildup of mineral deposits.

Polish the stem if necessary using a fine grade of emery cloth.

4. Similarly, examine and polish the upper bushing (in the bonnet) and the lower guide (in the seat ring).
5. Reinstall the spool assembly.
6. Reassemble the valve, following Steps 12 thru 17 in Procedure A.

PROCEDURE C: SEAT DISC REPLACEMENT

1. Perform Steps 1 and 2 of Procedure B, above.
2. With the spool assembly removed from the body, remove the seat retainer screws.
3. Slide the seat retainer off the lower end of the stem.
4. Remove the seat disc from its groove in the spool. *NOTE: The seat disc may fit quite tightly in the groove. If necessary, it may be pried out using a thin-bladed screwdriver or similar tool.*
5. Install the new seat disc in the groove.
6. Reinstall the seat retainer and tighten the seat retainer screws.
7. Reassemble the valve, following Steps 5 and 6 of Procedure B.

PROCEDURE D: SEAT RING REPLACEMENT

NOTE: It is rare for a seat ring to require replacement. Minor nicks and scratches in the seating surface can usually be smoothed out with emery cloth.

1. Perform Steps 1 and 2 of Procedure B, above.
2. If you are working on a 4" or smaller valve, follow Steps 3 thru 9, below.
3. If you are working on a 6" or larger valve, follow Steps 10 thru 16, below.
4. Seat rings in valves 4" and smaller are threaded into the valve body. To remove, you will need a special seat ring tool. You may fabricate one using standard pipe as shown in the sketch below, or one may be purchased from OCV.
5. Using the seat ring tool, unthread the seat ring from the body.
6. Remove the old o-ring from the counterbore in the body.
7. Install the new o-ring in the counterbore.
8. Using the seat ring tool, install the new seat ring.
9. Reassemble the valve, following Steps 5 & 6 of Procedure B.
10. Seat rings in valves 6" and larger are bolted into the body with socket head capscrews. In addition you will note that the seat ring is equipped with additional threaded holes that may be used for "jacking" the seat ring out of the body.
11. Remove the socket head capscrews.
12. Remove the old seat ring from the body by temporarily installing two or more of the capscrews in the "jacking" holes.
13. Install a new o-ring in the groove of the new seat ring. Lubricate the o-ring and outer seat ring wall with Vaseline® or similar lubricant.
14. Install the new seat ring in the body, making sure that the capscrew holes line up.
15. Replace and tighten all the capscrews.
16. Reassemble the valve, following Steps 5 and 6 of Procedure B.

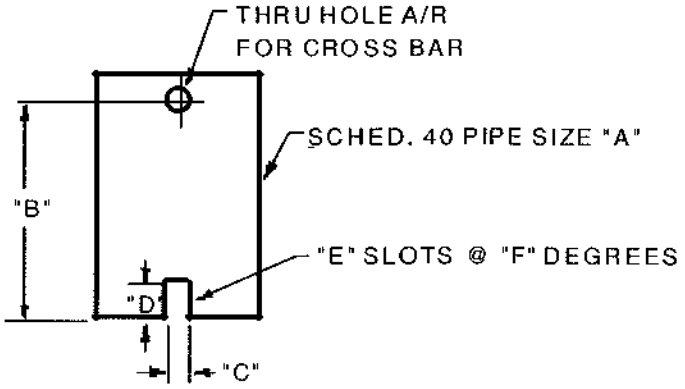

VALVE SIZE	"A" PIPE SIZE	"B" MIN. LENGTH	"C" SLOT WIDTH	"D" SLOT DEPTH	"E" NO. OF SLOTS	"F" SLOT SPACING
1-1/4"	3/4"	6"	3/8"	3/8"	2	180°
1-1/2"	3/4"	6"	3/8"	3/8"	2	180°
2"	1-1/2"	7"	3/8"	3/8"	2	180°
2-1/2"	2"	8"	1/2"	1/2"	3	120°
3"	2-1/2"	9"	5/8"	5/8"	2	180°
4"	3"	10"	5/8"	5/8"	2	180°

REVISED 3-17-97

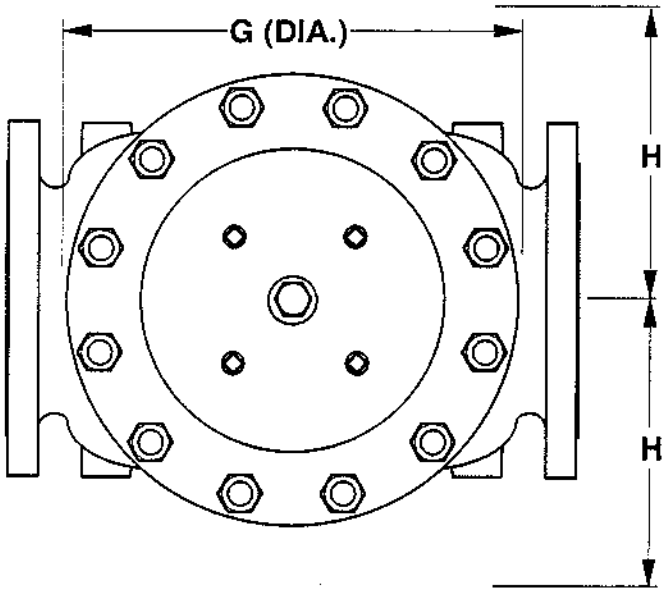

DIM	ANSI CLASS	VALVE SIZE 1 1/4	1 1/2	2	2 1/2	3	4	6	8	10	12	14	16	24
A	S.E	8.75	8.75	9.88	10.50	13.00	–	–	–	–	–	–	–	–
	150	8.50	8.50	9.38	10.50	12.00	15.00	17.75	25.38	29.75	34.00	39.00	40.38	62.00
	300	8.75	8.75	9.88	11.12	12.75	15.62	18.62	26.38	31.12	35.50	40.50	42.00	63.75
B	SE	1.44	1.44	1.69	1.88	2.25	–	–	–	–	–	–	–	–
	150	2.31	2.50	3.00	3.50	3.75	4.50	5.50	6.75	8.00	9.50	10.62	11.75	16.00
	300	2.62	3.06	3.25	3.75	4.12	5.00	6.25	7.50	8.75	10.25	11.50	12.75	18.00
C	SE	4.38	4.38	4.75	6.00	6.50	–	–	–	–	–	–	–	–
	150	4.25	4.25	4.75	6.00	6.00	7.50	10.00	12.69	14.88	17.00	–	20.81	–
	300	4 3/8	4.38	5.00	6.38	6.38	7.81	10.50	13.19	15.56	17.75	–	21.62	–
D	SE	3.12	3.12	3.88	4.00	4.50	–	–	–	–	–	–	–	–
	150	3.00	3.00	3.88	4.00	4.00	5.50	6.00	8.00	11.38	11.00	–	15.69	–
	300	3.25	3.25	4.12	4.38	4.38	5.81	6.50	8.50	12.06	11.75	–	16.50	–
E	ALL	6.00	6.00	6.00	7.00	6.50	7.92	10.00	11.88	15.38	17.00	18.00	19.00	27.00
F	ALL	3.88	3.88	3.88	3.88	3.88	3.88	3.88	6.38	6.38	6.38	6.38	6.38	8.00
G	ALL	6.00	6.00	6.75	7.69	8.75	11.75	14.00	21.00	24.50	28.00	31.25	34.50	52.00
H	ALL	10.00	10.00	11.00	11.00	11.00	12.00	13.00	14.00	17.00	18.00	20.00	20.00	28.50

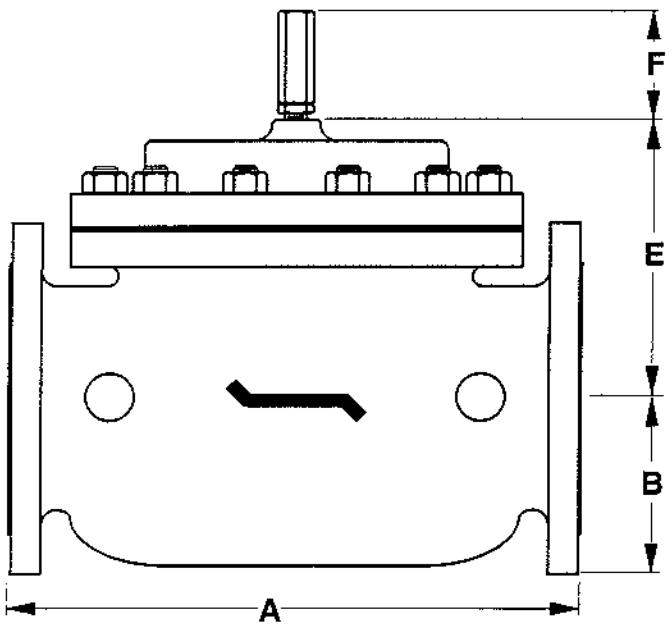

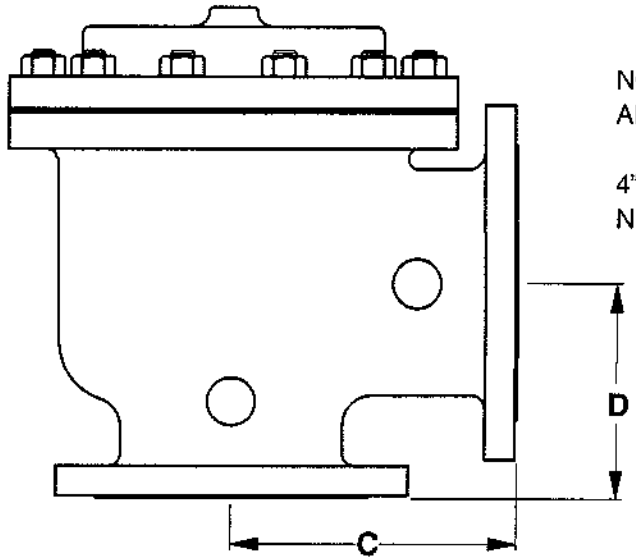

NOTE: 3" VALVE DIMENSIONS ARE FOR NEW MODEL 3100

4" VALVE DIMENSIONS ARE FOR NEW MODEL 4400

REV. A SDJ 6-6-02
REV. B SDJ 2-3-03

TOLERANCES	
UNLESS NOTED	
FRACTIONAL ±1/64	
DECIMAL ±.005	
MACH. FINISH 125√	
ANGULAR ±1/2°	
DRAWN BY SDJ	DATE 10-6-97
CHKD. BY	DATE

OCV Control Valves
TULSA, OKLAHOMA U.S.A.

GENERAL VALVE DIMENSIONS

SIZE	DRAWING NUMBER	REV.
A	65D	B

INSTALLATION & MAINTENANCE INSTRUCTIONS

ASCO.
BULLETIN
8320

3-WAY SOLENOID VALVES — NORMALLY OPEN, NORMALLY CLOSED, AND UNIVERSAL OPERATION
1/4" NPT — BRASS AND STAINLESS STEEL CONSTRUCTION

Form No.V5688R2

DESCRIPTION

Bulletin 8320 valves are small 3-way solenoid valves with all three connections located in the body. Valve bodies are made of brass or stainless steel.

Standard valves have a Type 1, General Purpose Solenoid Enclosure. Valves may also be provided with an explosion-proof solenoid enclosure designed to meet Enclosure Type 3-Raintight, Type 7 (C & D)-Explosion-Proof Class I, Groups C & D and Type 9 (E, F, & G)-Dust Ignition-Proof Class II, Groups E, F, & G, and have a temperature range code of TC3. Installation and maintenance instructions for the explosion-proof solenoid enclosure are on Form No.V5380.

OPERATION

Normally Open (Pressure at 3)

Applies pressure when solenoid is de-energized; exhausts pressure when solenoid is energized. When solenoid is de-energized, flow is from Port "3" to Port "1." Port "2" is closed. When solenoid is energized, flow is from Port "1" to "2." Port "3" is closed.

Normally Closed (Pressure at 2)

Applies pressure when solenoid is energized; exhausts pressure when solenoid is de-energized. When solenoid is de-energized, flow is from Port "1" to Port "3." Port "2" is closed. When solenoid is energized, flow is from Port "2" to Port "1." Port "3" is closed.

Universal (Pressure at 1, 2, or 3)

For normally closed or normally open operation, selection or diversion of pressure can be applied to Ports "1", "2", or "3."

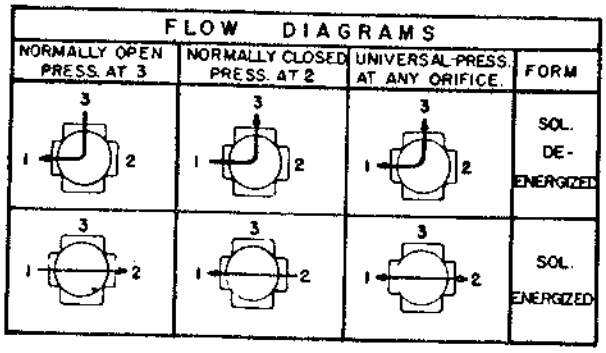

Manual Operator (Optional)

Manual operator allows manual operation when desired or during an electrical power outage. Two types of manual operators are available - push type (Suffix MO) and screw type (Suffix MS). To operate valve manually with push type operator, push stem at base of valve body as far upward as possible. Valve will now be in the same position as when the solenoid is energized. Removing pressure from stem will release manual operator to original position. To operate valve with a screw type manual operator, rotate manual operator stem at base of valve body clockwise until it hits a stop. Valve will now be in the same position as when the solenoid is energized. Rotate manual operator stem fully counterclockwise before operating valve electrically.

INSTALLATION

Check nameplate for correct catalog number, pressure, voltage, frequency, and service.

Temperature Limitations

For maximum valve ambient and fluid temperatures, refer to chart below. Check catalog number prefix and watt rating on nameplate to determine the maximum temperatures. See example below chart.

Construction AC or DC	Catalog Number Prefix	Watts	Maximum Ambient Temp. °F	Maximum Fluid Temp. °F
AC	None, DA, or S	10.5	77	200
	DF, FT, or SF	10.5	122	200
	HT	10.5	140	200
	None, DP, or SP	16.7*	77	200
DC	None, FT, or HT	11.2*	77	150

*Catalog Nos. 8320A170, 8320A180, and 8320A190 are limited to 140 °F fluid temperature.

EXAMPLES: For Catalog No.HT8320A201, AC construction with a watt rating of 10.5, the maximum ambient temperature is 140°F with a maximum fluid temperature of 200°F. For Catalog No. 8320A204, AC construction with a watt rating of 10.5, the maximum ambient temperature is 77°F with a maximum fluid temperature of 200°F.

Positioning

This valve is designed to perform properly when mounted in any position. However, for optimum life and performance, the solenoid should be mounted vertically and upright to reduce the possibility of foreign matter accumulating in the solenoid base sub-assembly area.

Mounting

For mounting dimensions of body boss (brass) or mounting brackets (optional on brass construction), refer to Figures 1, 2, and 3.

Piping

Connect piping to valve according to markings on valve body. Refer to flow diagrams provided. Apply pipe compound sparingly to male pipe threads only. If applied to valve threads, the compound may enter the valve and cause operational difficulty. Avoid pipe strain by properly supporting and aligning piping. When tightening the pipe, do not use valve or solenoid as a lever. Locate wrenches applied to valve body or piping as close as possible to connection point.

IMPORTANT: To protect the solenoid valve, install a strainer or filter, suitable for the service involved in the inlet side as close to the valve as possible. Clean periodically depending on service conditions. See ASCO Bulletins 8600, 8601, and 8602 for strainers.

Wiring

Wiring must comply with local codes and the National Electrical Code. Solenoid housings are provided with a 7/8" diameter hole to accommodate 1/2" conduit. On some constructions, a green grounding wire is provided. Use rigid metallic conduit to ground all enclosures not provided with a green grounding wire. To facilitate wiring, the enclosure may be rotated 360° by removing the retaining cap or clip. **WARNING: When metal retaining clip disengages, it will spring upward.** Rotate enclosure to desired position. Then replace retaining cap or clip before operating.

NOTE: Alternating current (AC) and direct current (DC) solenoids are built differently. To convert from one to the other, it is necessary to change the complete solenoid, including the solenoid base sub-assembly and core assembly.

Printed in U.S.A.

ASCO Valves

Automatic Switch Co. 50-60 Hanover Road, Florham Park, New Jersey 07932

© Automatic Switch Co. BULLETIN All Rights Reserved

Solenoid Temperature

Standard catalog valves are supplied with coils designed for continuous duty service. When the solenoid is energized for a long period, the solenoid enclosure becomes hot and can be touched by hand only for an instant. This is a safe operating temperature. Any excessive heating will be indicated by the smoke and odor of burning coil insulation.

MAINTENANCE

NOTE: It is not necessary to remove the valve from the pipeline for repairs.
WARNING: Turn off electrical power supply and depressurize valve before making repairs.

Cleaning

All solenoid valves should be cleaned periodically. The time between cleanings will vary depending on the medium and service conditions. In general, if the voltage to the coil is correct, sluggish valve operation, excessive noise, or leakage will indicate that cleaning is required. Clean valve strainer or filter when cleaning the valve.

Preventive Maintenance

1. Keep the medium flowing through the valve as free from dirt and foreign material as possible.
2. While in service, the valve should be operated at least once a month to insure proper opening and closing.
3. Depending on the medium and service conditions, periodic inspection of internal valve parts for damage or excessive wear is recommended. Thoroughly clean all parts. Replace worn or damaged parts. However, for best results, replace all parts as supplied with an ASCO Rebuild Kit.

Causes Of Improper Operation

1. Faulty Control Circuits: Check the electrical system by energizing the solenoid. A metallic "click" signifies that the solenoid is operating. Absence of the "click" indicates loss of power supply. Check for loose or blown fuses, open circuited or grounded coil, broken lead wires or splice connections.
2. Burned-Out Coil: Check for open-circuited coil. Replace coil as necessary. Check supply voltage; it must be the same as specified on nameplate.
3. Low Voltage: Check voltage across the coil lead. Voltage must be at least 85% of nameplate rating.
6. Incorrect Pressure: Check valve pressure. Pressure to valve must be within range specified on nameplate.
5. Excessive Leakage: Disassemble valve (see Maintenance) and clean all parts. Replace worn or damaged parts. However, for best results, replace all parts as supplied with an ASCO Rebuild Kit.

Coil Replacement (Refer to Figures 4 and 5)

WARNING: Turn off electrical power supply.

1. Disconnect coil lead wires.
2. Remove retaining cap or clip, nameplate and housing. WARNING: When metal retaining clip disengages, it will spring upward.
3. Remove spring washer, insulating washer, coil, insulating washer, ground wire terminal (if present) from solenoid base sub-assembly. Insulating washers are omitted when a molded coil is used.
4. Reassemble in reverse order of disassembly. Use exploded view provided for identification and placement of parts.

CAUTION: The solenoid must be fully reassembled because the housing and internal parts complete the magnetic circuit. Be sure to replace insulating washer at each end of the non-molded coil.

Valve Disassembly (Refer to Figures 4 and 5)

WARNING: Depressurize valve and turn off electrical power supply.

1. Disassemble valve in an orderly fashion. Use exploded views for identification and placement of parts.
2. If necessary, disconnect coil lead wires, grounding wire (if present), and rigid conduit from solenoid housing.
3. Remove retaining cap or clip and slip the entire solenoid enclosure off the solenoid base sub-assembly. WARNING: When metal retaining clip disengages, it will spring upward.
4. Unscrew solenoid base sub-assembly from valve body.
5. Remove core assembly, core spring, core guide (AC construction only), and solenoid base gasket.
6. Unscrew end cap (or manual operator assembly) and remove end cap gasket, disc holder spring, and disc holder sub-assembly.
7. All parts are now accessible to clean or replace. Replace worn or damaged parts. However, for best results, replace all parts as supplied with an ASCO Rebuild kit.

Valve Reassembly

1. Reassemble in reverse order of disassembly. Use exploded views for identification and placement of parts.
2. Lubricate all gaskets with DOW CORNING® 111 Compound lubricant or an equivalent high-grade silicone grease. For stainless steel valve constructions, apply a small amount of LOCTITE® PST® pipe sealant (ASCO No. 208-832-11) to male threads of end cap (or manual operator assembly). Pipe sealant supplied in ASCO Rebuild Kits.
3. Replace disc holder sub-assembly, disc holder spring, end cap gasket, and end cap (or manual operator assembly). For brass construction, torque end cap to 175 ± 25 inch-pounds (19,8 ± 2,8 newton-meters). For stainless steel, torque end cap to 90 ± 10 inch-pounds (10,2 ± 1,1 newton-meters).
4. Replace solenoid base gasket, core assembly, core spring, core guide (on AC construction only), and solenoid base sub-assembly. Torque solenoid base sub-assembly to 175 ± 25 inch-pounds (19,8 ± 2,8 newton-meters).
5. Replace solenoid enclosure and retaining cap or clip.
6. Restore line pressure and electrical power supply to valve.
7. After maintenance is completed, operate the valve a few times to be sure of proper operation. A metallic "click" signifies the solenoid is operating.

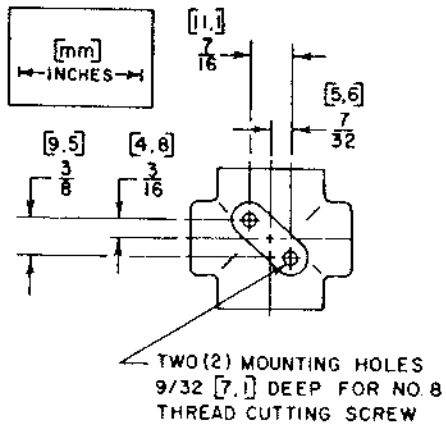

Figure 1. Brass Valve Body Mounting

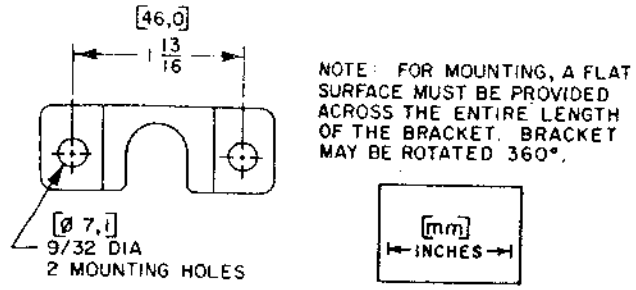

Figure 2. Mounting Bracket for Stainless Steel

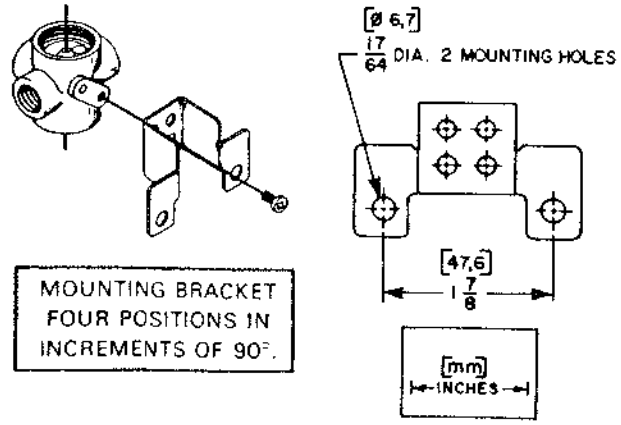

Figure 3. Optional Mounting Bracket for Brass

ORDERING INFORMATION FOR ASCO REBUILD KITS AND COILS

Parts marked with an asterisk (*) in the exploded view are supplied in Rebuild Kits.

- When Ordering Rebuild Kits for ASCO valves, order the Rebuild Kit number stamped on the valve nameplate.+
- When Ordering Coils for ASCO valves, order the number stamped on your coil.+

+ If the number of the Rebuild Kit or the Coil is not visible, order them and specify your valve's Catalog Number, Serial Number, Voltage, and Frequency.

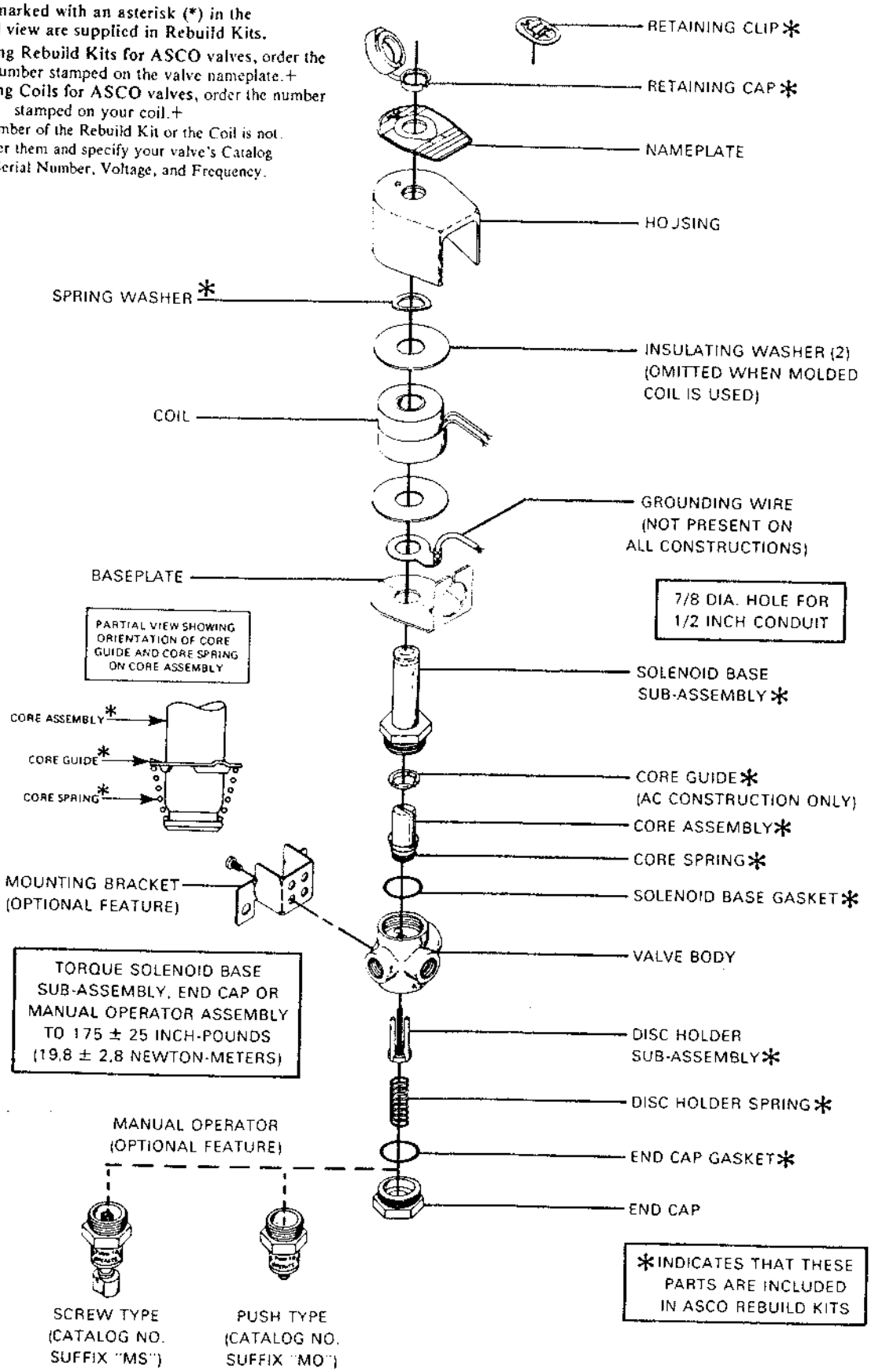

Figure 4. Bulletin 8320, Brass Construction With General Purpose Solenoid Enclosure Shown For Explosion-Proof Solenoid Enclosure, See Form No.V5380.

© Automatic Switch Co. MCMLXXVI. All Rights Reserved.

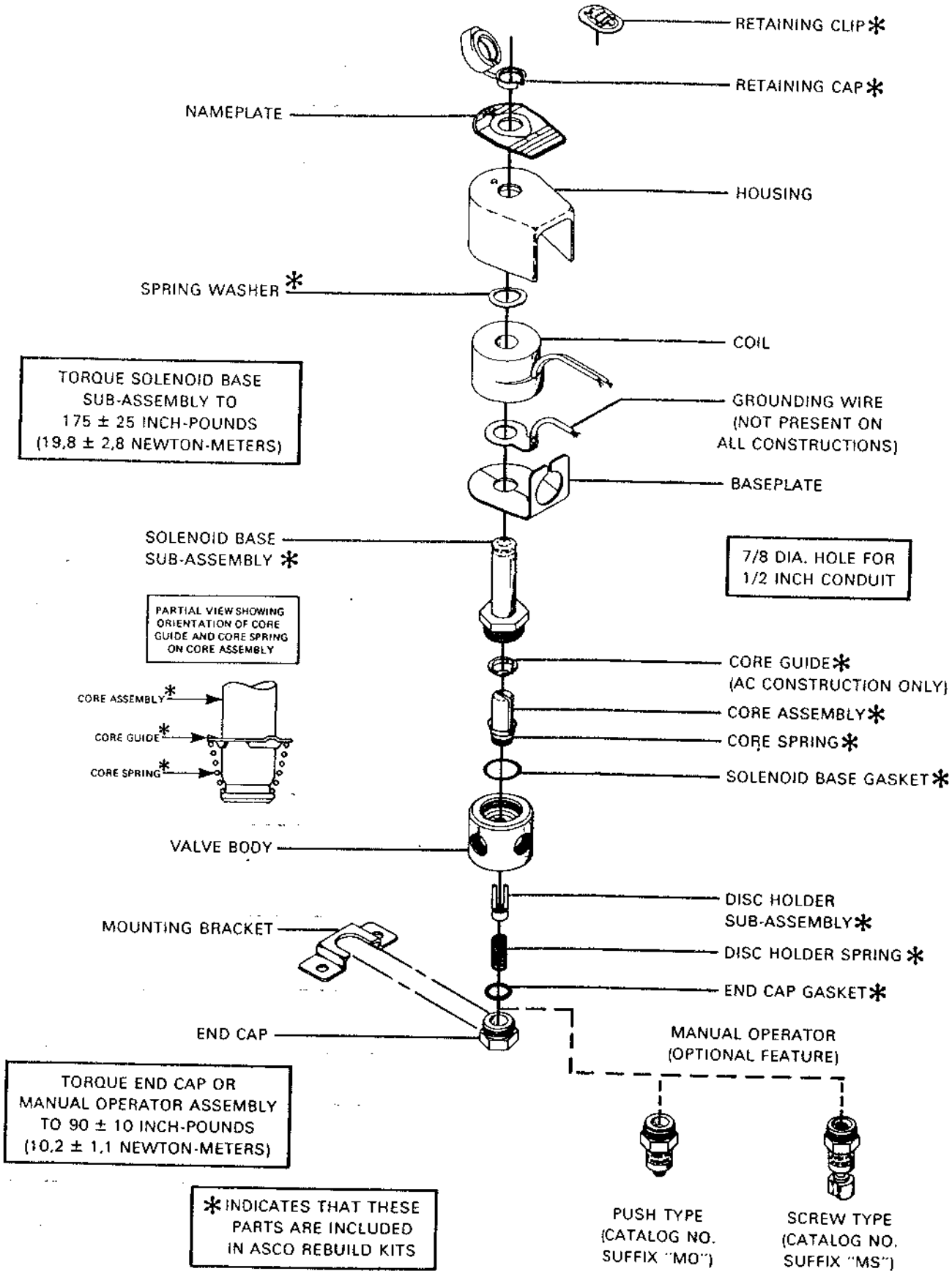

Figure 5. Bulletin 8320, Stainless Steel Construction With General Purpose Solenoid Enclosure Shown. For Explosion- Proof Solenoid Enclosure, See Form No.V5380.

© Automatic Switch Co. MCMLXXIII. All Rights Reserved.

three-way pilot

installation, operating, and maintenance instructions

model 330

GENERAL DESCRIPTION

The OCV Model 330 is a hydraulically-operated, diaphragm-actuated, three-way valve. It is normally used on a main valve when faster-than-normal closing speed is required or when another pilot (e.g., float pilot or solenoid valve) is used to actuate the main valve.

FUNCTIONAL DESCRIPTION

The ports of the OCV Model 330 are connected as follows (refer to attached drawing for identification):

Port A - To inlet side of main valve

Port B - To bonnet of main valve

Port C - To discharge side of main valve

Port D - To actuating pilot

Pressurizing the bonnet of the three-way pilot moves its stem to the "down" position connecting Ports A and B, thus routing inlet pressure to the main valve bonnet and closing it. Depressurizing the bonnet of the OCV Model 330 allows its stem to return to the "up" position, connecting Ports A and C, relieving the pressure on the main valve bonnet to downstream and opening the main valve.

TROUBLESHOOTING

A major malfunction in the three-way pilot would generally be evident in a failure of the main valve to open or close. However, keep in mind that such symptoms can also be caused by a malfunction in the main valve itself or in the control pilot(s). If the 330 is suspected, proceed as follows:

A. FAILURE OF PILOT TO CLOSE MAIN VALVE

1. Ruptured diaphragm:
   - (a) Detach sense line from the bonnet of the pilot and remove the bonnet. Inspect the diaphragm carefully for holes or cracks.
   - (b) If damaged, replace with new diaphragm.
2. Pilot stem binding:
   - a) With bonnet removed, inspect the stem journal in the bonnet for buildup of foreign material.
   - b) Clean as necessary and reassemble pilot.
3. Obstruction in seat area:
   - a) Disassemble pilot and remove obstruction.
4. Rubber seat damaged:
   - a) Disassemble pilot and examine seats for excessive wear or damage.
   - b) Replace if necessary and reassemble pilot.

B. FAILURE OF PILOT TO OPEN MAIN VALVE

1. Pilot stem binding: Proceed as in A2, above.
2. Obstruction in seat area: Proceed as in A3, above.
3. Rubber seat damaged: Proceed as in A4, above.

MAINTENANCE

Because of the simplicity of design of the 330 pilot, required maintenance is minimal. Check fittings and bolts periodically for tightness, and inspect the body for damage or excessive buildup of foreign material.

OCV Control Valves
7400 East 42nd Place / Tulsa, Oklahoma 74145 -4744 USA / (918) 627-1942 / 888-OCV-VALV / FAX 918-622-8916
e-mail: sales@controlvalves.com / website: www/controlvalves.com

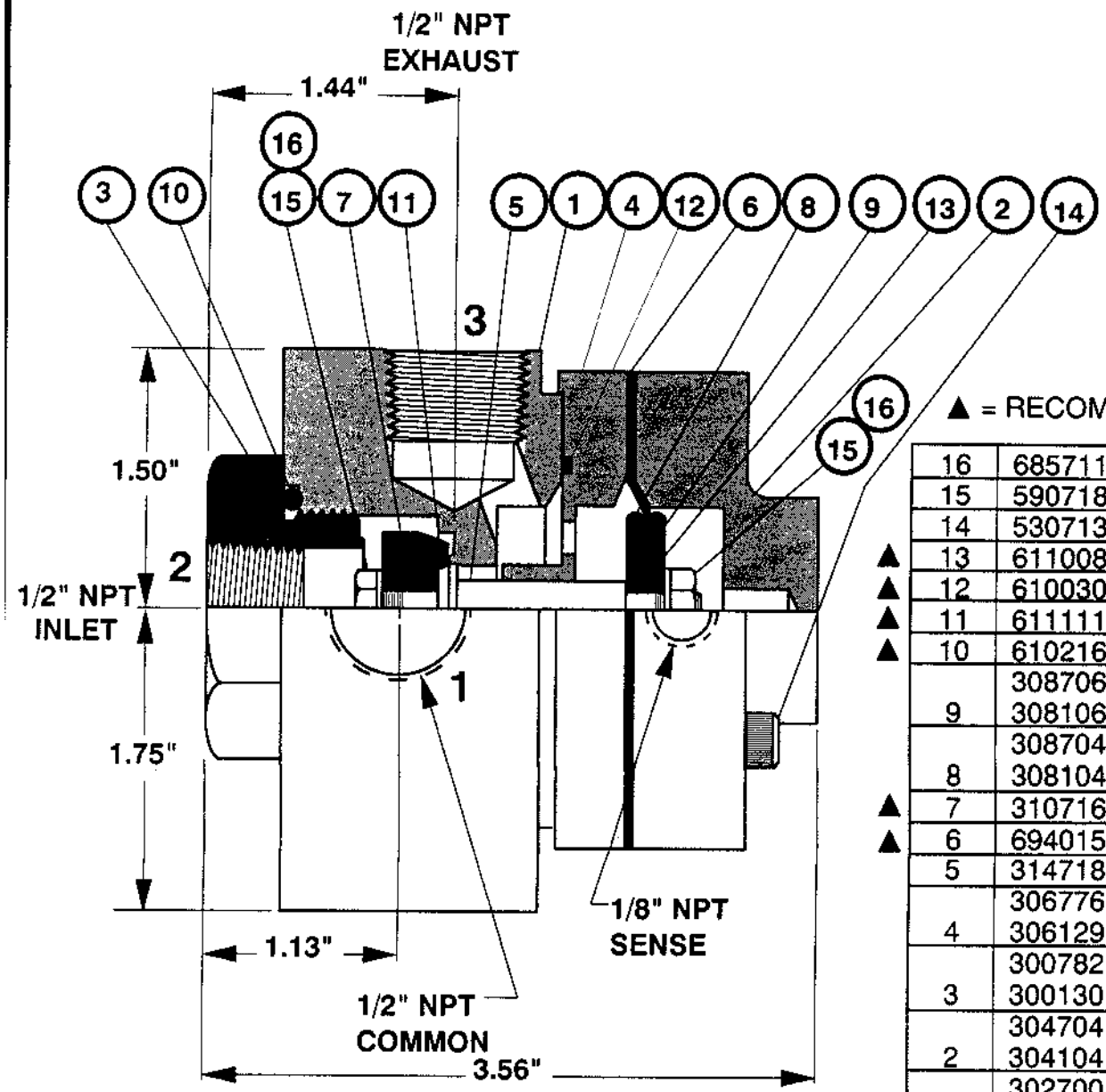

▲ = RECOMMENDED SPARE PARTS

	ITEM	PART NO	QTY	DESCRIPTION	MATERIAL
	16	685711	2	LOCKWASHER	STN. STEEL
	15	590718	2	HEX NUT	STN. STEEL
	14	530713	4	SKT. HD. CAPSCREW	STN. STEEL
▲	13	611008	1	O-RING (610008 BUNA-N)	VITON
▲	12	610030	1	O-RING (611030 VITON)	BUNA-N
▲	11	611111	1	O-RING (610111 BUNA-N)	VITON
▲	10	610216	1	O-RING (611216 VITON)	BUNA-N
	9	308706 308106	1	UPPER DIAPH. PLATE	STN. STEEL BRASS
	8	308704 308104	1	LOWER DIAPH. PLATE	STN. STEEL BRASS
▲	7	310716	1	SEAT PLUG (310727 SS/VT)	SS/BUNA-N
▲	6	694015	1	DIAPHRAGM (694115 VIT)	BUNA-N
	5	314718	1	STEM	STN. STEEL
	4	306776 306129	1	GUIDE PLATE	STN. STEEL BRASS
	3	300782 300130	1	ADAPTER	STN. STEEL BRASS
	2	304704 304104	1	BONNET	STN. STEEL BRONZE
	1	302700 302100	1	BODY	STN. STEEL BRONZE

CHG	E.C. NO.	DATE	BY

REVISIONS

REF DWG NO'S

MATERIAL

NO. REQ'D

SCALE FULL

TOLERANCES
UNLESS NOTED
FRACTIONAL ±1/64
DECIMAL ±.005
MACH. FINISH 125
ANGULAR ±1/2°

DRAWN BY RON DATE 12-17-98

CHKD. BY DATE

OCV Control Valves

THREE-WAY PILOT

SIZE	DRAWING NUMBER	REV.
A	330P	

three-way pilot

installation, operating, and maintenance instructions

model 3600

GENERAL DESCRIPTION

The OCV Model 3600 is a hydraulically-operated, diaphragm-actuated, three-way valve. It is normally used on a main valve when faster-than-normal closing speed is required or when another pilot (e.g., float pilot or solenoid valve) is used to actuate the main valve.

FUNCTIONAL DESCRIPTION

Pressurizing the bonnet of the three-way pilot moves its stem to the "down" position connecting Ports 1 and 3. Depressurizing the bonnet of the OCV Model 3600 allows its stem to return to the "up position," connecting Ports 1 and 2.

Pressurize the bonnet of the 3600 to open the main valve on Model 115-4's, 125's and 119's. De-pressurize the bonnet of the 3600 to open the main valve on Model 3333's and 118's.

TROUBLESHOOTING

A major malfunction in the three-way pilot would generally be evident in a failure of the main valve to open or close. However, keep in mind that such symptoms can also be caused by a malfunction in the main valve itself or in the control pilot(s). If the 3600 is suspected, proceed as follows:

1. FAILURE OF PILOT TO CLOSE MAIN VALVE
   A. Ruptured diaphragm
      (1) Detach sense line from the bonnet of the pilot and remove the bonnet. Inspect the diaphragm carefully for holes or cracks.
      (2) If damaged, replace with new diaphragm.
   B. Pilot stem binding
      (1) With bonnet removed, inspect the stem journal in the bonnet for buildup of foreign material.
      (2) Clean as necessary and reassemble pilot.
   C. Obstruction in seat area
      (1) Disassemble pilot and remove obstruction.
   D. Rubber seat damaged
      (1) Disassemble pilot and examine seats for excessive wear or damage.
      (2) Replace if necessary and reassemble pilot.
2. FAILURE OF PILOT TO OPEN MAIN VALVE
   A. Pilot stem binding
      (1) Proceed as in 1B above.
   B. Obstruction in seat area
      (1) Proceed as in 1C above.
   C. Rubber seat damaged
      (1) Proceed as in 1D above.

MAINTENANCE

Because of the simplicity of design of the 3600 pilot, required maintenance is minimal. Check fittings and bolts periodically for tightness, and inspect the body for damage or excessive buildup of foreign material.

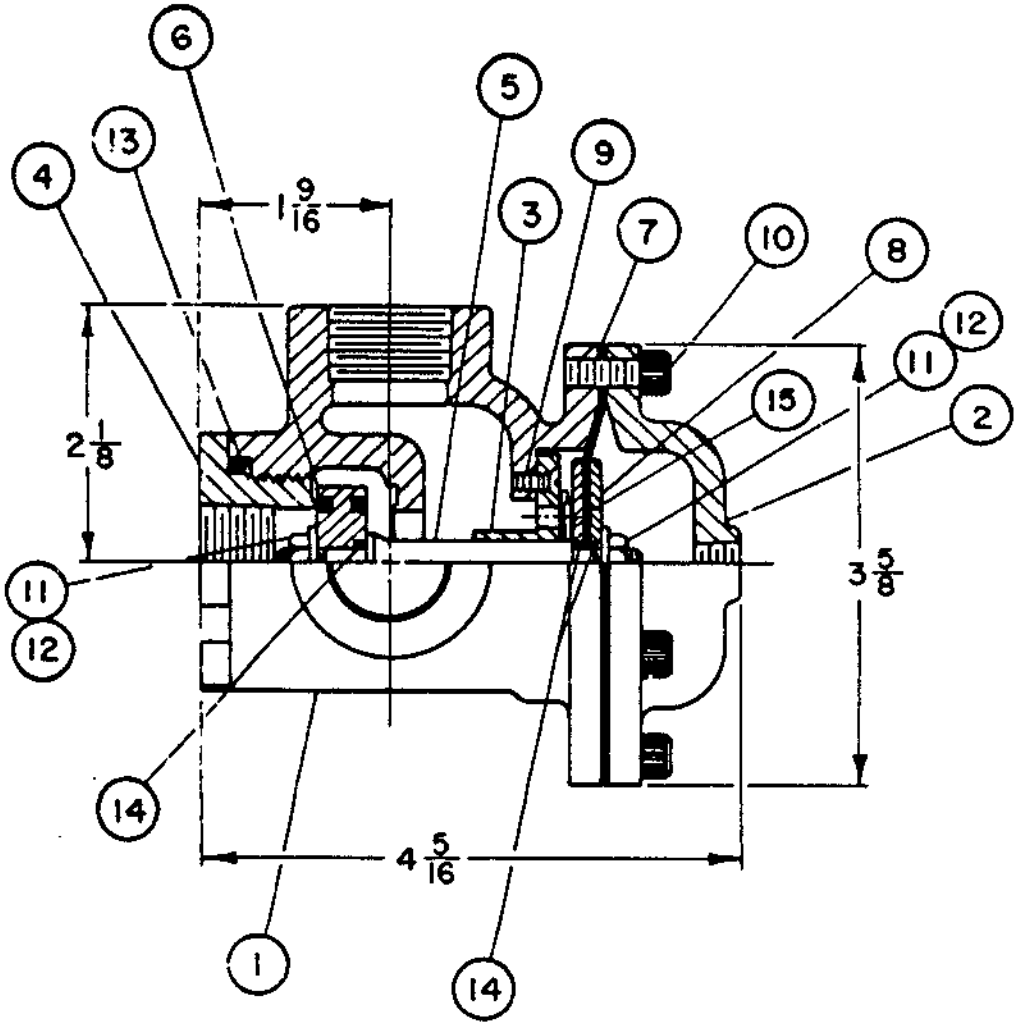

NOTE:

1. WHEN ORDERING PARTS, PLEASE SPECIFY; ITEM NO., PART NO. AND MATERIAL.
2. ▲ RECOMMENDED SPARE PARTS.

	ITEM	PART NO.	QTY.	DESCRIPTION	MATERIAL
	15	651717	1	SPRING	STAINLESS STEEL
▲	14	611010	3	O-RING	VITON
▲	13	610222	1	O-RING	BUNA-N
	12	685700	2	LOCKWASHER	STAINLESS STEEL
	11	590712	2	HEX HEAD JAM NUT	STAINLESS STEEL
	10	530701	6	SOCKET HD. CAPSCREW	STAINLESS STEEL
	9	532735	2	FLAT HEAD SCREW	STAINLESS STEEL
	8	308135	2	DIAPHRAGM PLATE	BRASS
		308735	2	DIAPHRAGM PLATE	STAINLESS STEEL
▲	7	694035	1	DIAPHRAGM	BUNA-N
		694135	1	DIAPHRAGM	VITON
▲	6	310736	1	SEAT DISC	STN. STL./BUNA-N
		310737	1	SEAT DISC	STN. STL./VITON
	5	314735	1	STEM	STAINLESS STEEL
	4	300171	1	ADAPTER	BRASS
		300771	1	ADAPTER	STAINLESS STEEL
	3	300164	1	GUIDE PLATE	BRASS
		300764	1	GUIDE PLATE	STAINLESS STEEL
	2	304135	1	BONNET	BRONZE
		304735	1	BONNET	STAINLESS STEEL
	1	302135	1	BODY	BRONZE
		302735	1	BODY	STAINLESS STEEL

PARTS LIST

REVISIONS				
E				
D				
C				
B				
A				
CHG	E C NO	DATE	BY	

REF DWG NO'S

MATERIAL

TOLERANCES UNLESS NOTED: FRACTIONAL ± 1/64, DECIMAL ± .005, MACH FINISH 125, ANGULAR ± 1/2°

NO REQ'D

SCALE

DRAWN BY: B.R.W. DATE: 7-28-83

CHKD BY DATE

OCV Control Valves

THREE-WAY PILOT

SIZE: B

DRAWING NUMBER: 3600S

REV: A

DESCRIPTION

The Model 141-2 Needle Valve is an adjustable restriction device installed in the control circuit tubing. The setting of the needle valve meters the flow into and out of the main valve diaphragm chamber, thus controlling the response speed of the main valve. Depending on the application, the needle valve may be used as a closing speed control, opening speed control, or both simultaneously.

◀**Needle Valves shown**
Sizes: 3/4" & 1/4"

MODEL 141-2 MATRIX

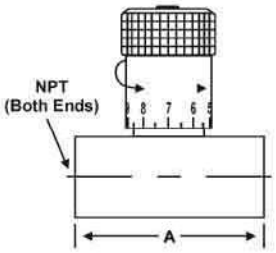

MATERIAL	PART NUMBER	INLET/OUTLET (NPT)	A	USED ON VALVE SIZE*
Brass	683100	1/4	2	1 ¼"-2"
Brass	683101	3/8	2 1/4	2 ½"-6"
Brass	683102	1/2	2 5/8	8"-10"
Brass	683103	3/4	3 1/4	12"-16"
Stn. Steel	683700	1/4	2	1 ¼"-2"
Stn. Steel	683702	3/8	2 1/4	2 ½"-6"
Stn. Steel	682704	1/2	2 5/8	8"-10"
Stn. Steel	683703	3/4	3 5/8	12"-16"

Note: Needle valve size may vary on valve application. Consult factory.

SCHEMATIC SYMBOL

The Model 141-2 Needle Valve is shown on OCV Valve Schematics as:

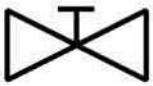

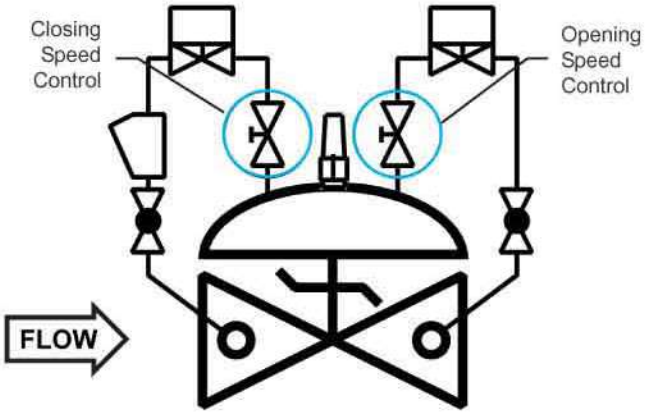

EXAMPLE: Shown here on a MODEL 115-3 DIGITAL VALVE as separate opening and closing speed controls.

TOLL FREE 1.888.628.8258 • **phone:** (918)627.1942 • **fax:** (918)622.8916 • 7400 East 42nd Place, Tulsa, OK 74145
email: sales@controlvalves.com • **website:** www.controlvalves.com

DESCRIPTION

MODEL 159 Y-STRAINER
The 159 Y-Strainer installs in the inlet piping of the pilot system and protects the pilot system from solid contaminants in the line fluid. It is the standard strainer for water service valves.

MODEL 159 Y-STRAINER MATRIX

MATERIAL	PART NUMBER	INLET/OUTLET (NPT)	BLOW OFF PORT (NP)	A	STD. MESH	USED ON VALVE SIZE
Bronze	660100	3/8	3/8	2 11/16	24	1 ¼"-6"
Bronze	660101	1/2	3/8	2 5/8	24	8"-10"
Bronze	660102	3/4	3/8	3 5/16	24	12"-16"
Stn. Steel	660700	3/8	1/4	2 1/2	20	1 ¼"-6"
Stn. Steel	660701	1/2	1/4	2 1/2	20	8"-10"
Stn. Steel	660702	3/4	1/4	3 1/8	20	12"-16"

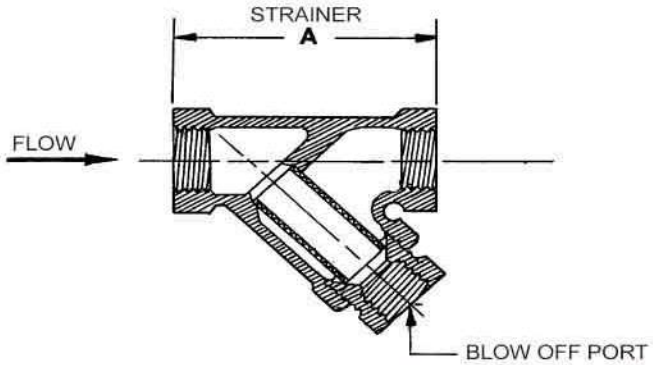

MATERIALS

Bronze, ASTM B62
Optional mesh sizes: 50,100

Stainless Steel, CF8-M (316)
Optional mesh sizes: 60, 80, 100

Screens are stainless steel

SCHEMATIC SYMBOL

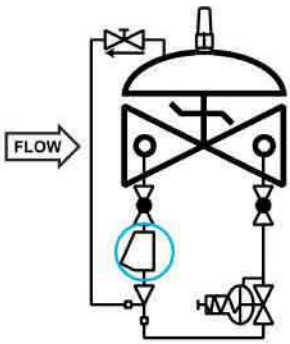

The Model 159 Y-Strainer is shown on OCV Valve Schematics as:

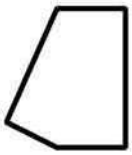

EXAMPLE: Shown here on a MODEL 127-3 Pressure Reducing Valve

MAINTENANCE

Routine cleaning and checking of the Y-Strainer will aid in keeping the control valve functioning properly. Pilot system isolation ball valves are supplied on valves equipped with the Model 159 Y-Strainer. These allow flushing of the screen through the blow off port, or removal of the screen itself for manual cleaning.

TOLL FREE 1.888.628.8258 • **phone:** (918)627.1942 • **fax:** (918)622.8916 • 7400 East 42nd Place, Tulsa, OK 74145
email: sales@controlvalves.com • **website:** www.controlvalves.com

DESCRIPTION

The Model 141-4 Ball Valve is a ¼-turn shutoff device used for isolating the pilot system from the main valve. They are extremely useful for performing routine maintenance and troubleshooting.

Ball valves are standard on water service valves; optional on fuel service valves.

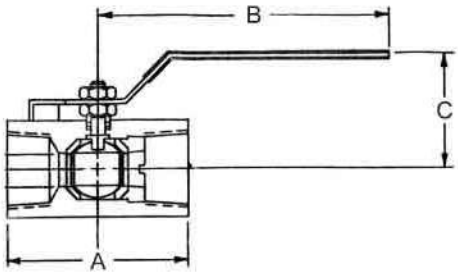

MODEL 141-4 MATRIX

MATERIAL	PART NUMBER	INLET/OUTLET (NPT)	A	B	C	USED ON VALVE SIZE*
Bronze	680100	3/8	1 3/4	3 1/2	1 7/8	1 ¼"-6"
Bronze	680101	1/2	2	3 1/2	2 1/4	8"-10"
Bronze	680102	3/4	3	4 3/4	2 1/4	12"-16"
Stn. Steel	680700	3/8	2	3 3/4	2 1/8	1 ¼"-6"
Stn. Steel	680701	1/2	2 1/4	3 3/4	2 1/2	8"-10"
Stn. Steel	680702	3/4	3	4 3/4	2 1/4	12"-16"

SCHEMATIC SYMBOL

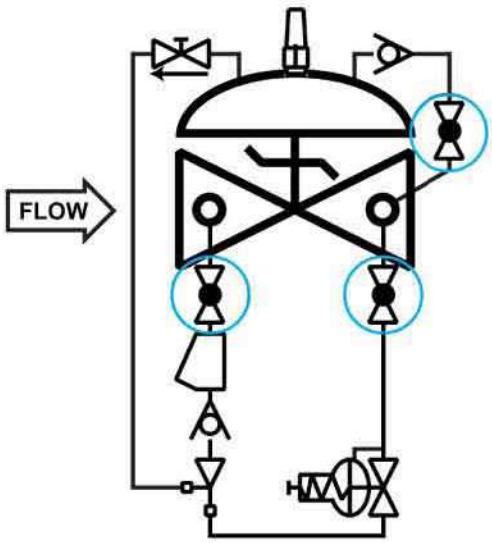

The Model 141-4 Ball Valve is shown on OCV Valve Schematics as:

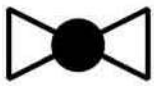

EXAMPLE: Shown here on a MODEL 127-4 Pressure Reducing / Check Valve.

TOLL FREE 1.888.628.8258 • **phone:** (918)627.1942 • **fax:** (918)622.8916 • 7400 East 42nd Place, Tulsa, OK 74145
email: sales@controlvalves.com • **website:** www.controlvalves.com

DESCRIPTION

MODEL 31 LIMIT SWITCH ASSEMBLY

- Provides electrical indication of valve position.
- Adjustable to any point of valve travel.
- Heavy-duty stem seal.
- Installed without disassembly of valve.
- Available in weatherproof or explosion-proof enclosures.
- SPDT contacts (standard) DPDT (optional)

The Model 31 Limit Switch Assembly is a device that uses movement of the valve stem to make or break electrical contacts at designated points in the valve travel. It consists of an adaptor threaded into the center port of the valve bonnet, a rod threaded into the main valve stem, a heavy-duty stem seal, an actuating collar, and the switch unit. It may be installed on virtually any OCV control valve, and can be done so without any disassembly of the valve itself.

WHERE USED - Standard on Series 125/126 Pump Control Valves. Optional on all other series control valves.

MODEL 31 ASSY MATRIX

SWITCH TYPE	VALVE CLOSED	VALVE OPEN
OP-AR and EX-AR (SPDT) OPD-AR and EXD-AR-3 (DPDT) *OCV Standard Configuration*	N.C. contact(s) closed N.O. contact(s) open Switch roller OFF collar	N.C. contact(s) open N.O. contact(s) closed Switch roller ON collar
OP-AR30 and EX-AR30 (SPDT) OPD-AR30 and EXD-AR30-3 (DPDT) *Optional configuration*	N.C. contact(s) open N.O. contact(s) closed Switch roller ON collar	N.C. contact(s) closed N.O. contact(s) open Switch roller OFF collar

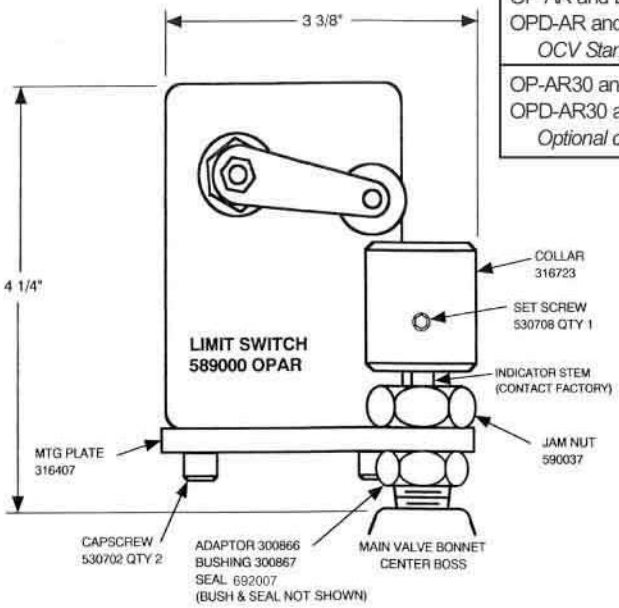

VALVE SIZE	PART NUMBER OP-AR (SPDT) Weatherproof	PART NUMBER EX-AR (SPDT) Explosion proof
1 1/4" - 1 1/2"	Consult factory	Consult factory
2" - 4"	252710	252413
6" - 8"	252720	252423
10 - 12"	252730	Consult factory
14" - 16"	252740	Consult factory

These part numbers include Buna-N stem seal. Consult Factory for part numbers on DPDT, other stem seals, and all model 31 switches shown in the Actuation matrix.

NOTE: Factory recommended valve installation should allow for indicator rod to be in the vertical position.

SCHEMATIC SYMBOL

The Model 31 is shown on OCV Valve Schematic as:

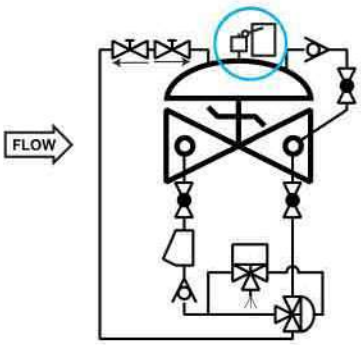

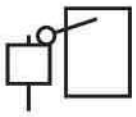

EXAMPLE: Shown here on a Model 125 Pump Control Valve

ELECTRICAL RATING

SPDT: 15 amps @ 125-480 VAC
1/2 amp @ 125 VDC, 1/4 amp @ 250 VDC
DPDT: 10 amps @ 125-250 VAC
0.3 amp @125 VDC, 0.15 amp @ 250 VDC

ENCLOSURES

OP Switches Weatherproof NEMA 4
EX Switches Explosion Proof NEMA 7, 9

MATERIALS

Indicator Rod: Stainless Steel
Adapter: Stainless Steel
Collars Stainless Steel

TOLL FREE 1.888.628.8258 • **phone:** (918)627.1942 • **fax:** (918)622.8916 • 7400 East 42nd Place, Tulsa, OK 74145
email: sales@controlvalves.com • **website:** www.controlvalves.com