installation, operating and maintenance instructions

pneumatically activated *deluge valve*

model 116FC

Rev. 3-16-99

GENERAL DESCRIPTION

The OCV Model 116FC, also described as a **deluge valve**, is **UL Listed**, and performs the following primary functions:

1. The 116FC is installed in the main line. It functions to **remain closed** by means of a pneumatic supply pressure to it's pneumatic actuator.

2. When the pneumatic supply pressure is removed, it functions to **open** and admit water through the main line.

The Model 116FC consists of the following components, arranged as shown on the schematic diagram:

1. **Model 65 Basic Control Valve**, a hydraulically-operated, diaphragm-actuated, globe or angle valve which closes with an elastomer-on-metal seal.

2. **Model 550 Pneumatic Pilot**, a two-way, normally-open pilot valve which senses pneumatic pressure over its piston and holds the valve closed against it's spring force. **Removal of the pneumatic supply pressure causes the valve to open via the spring force and hydraulic force under it's seat, which in turn opens the main valve.**

3. **Model 126 Ejector**, a simple "tee" fitting with a fixed orifice in its inlet port. It provides the proper pressure to the diaphragm chamber of the main valve depending on the position of the pneumatic pilot.

4. **Model 123 Inline Strainer or 159 Y-Strainer.** The strainer protects the pilot system from solid contaminants in the line fluid.

5. Two **Model 141-4 Ball Valves.** See schematic diagram for normal positions of the ball valves.

6. **Model 155 Visual Indicator Assembly.** Useful for indication of valve position at a glance.

DRAIN PORT

A large 2" NPTF drain port is provided underneath the main valve body for quick drainage of inlet (supply) piping on sizes 4" thru 10". 1 1/4" NPTF is provided on the 3" valve.

THEORY OF OPERATION

DELUGE ACTION: To understand how the 116FC operates, it is best to start with the **Ejector (3)**. Due to the orifice in its upstream port, the ejector creates a pressure drop proportional to the flow through it. The flow through the ejector is in turn controlled by the degree of opening (full open or full closed) of the **Pneumatic Pilot (2)**. When the pilot is **fully open,** the **greater the flow** through the ejector and the **lower the pressure** downstream of the orifice. Conversely, when the pilot is **fully closed,** there is **no flow** through the ejector and the **greater the pressure** downstream of the orifice.

Now note that the diaphragm chamber of the Main Valve (1) is connected to the branch port of the ejector and is thus downstream of the orifice. Therefore, the pressure in the diaphragm chamber of the main valve is effectively controlled by the pneumatic pi-

lot, in the manner described above. As the pilot **opens**, the diaphragm pressure **decreases** and the main valve **opens**; as the pilot **closes**, the diaphragm pressure **increases** and the main valve **closes**.

INSTALLATION

For full installation details, the user is referred to the Model 65 Basic Valve section of this manual.

START-UP AND ADJUSTMENTS

The following procedures should be followed in the order presented in order to affect an initial startup of the 116FC. **If difficulty in performance is experienced, contact the factory at 1-800-331-4113 or 1-888-OCV-VALV (1-888-628-8258) for a toll free discussion with an engineer, member of the sales staff, or for the name of the closest factory representative for your area.**

1. Make the pneumatic supply pressure connection to the pneumatic pilot and pressurize it. (Max. 140 psi).
2. (See schematic diagram). Assure that **5A** is **open.**
3. Assure that **5B** is **closed.**
4. Start the pump or otherwise start the system flowing. The main valve at this time should be **fully closed.**
5. **(CONTROL CIRCUIT AIR PURGE)** Carefully, only slightly, open the manual override ball valve (5B) on the main valve bonnet until fluid begins to discharge. When only clear fluid (no air bubbles) is discharging, reclose the ball valve. **Be careful because opening the manual override ball valve too much may allow the valve to open.** If opening the valve does not present a system problem at this stage, cycling the valve open and closed a few times via the manual override ball valve, or the pneumatic pilot will serve the same purpose.
6. The valve is now ready for it's first opening cycle.
7. ***To open the main valve, remove the pneumatic supply pressure, or open 5B, the manual override ball valve.***

MAINTENANCE

Because of the simplicity of design of the 116FC, required maintenance is minimal. However, the following checks, periodically performed, can do much to keep the valve operating properly and efficiently.

1. Check for chipped or peeling paint. Touch up as required.
2. Check for leaks at fittings and around flanges and connections. Tighten as required.

TROUBLESHOOTING

In the event of malfunction of the 116FC, the following guide should enable the technician to isolate the specific cause of the problem and take the appropriate corrective action.

A. MAIN VALVE FAILS TO OPEN:

NOTE: THIS VALVE IS EQUIPPED WITH A MANUAL OVERRIDE FEATURE 5B. OPENING IT WILL BYPASS THE OTHER COMPONENTS IN THE PILOT SYSTEM AND WILL OPEN THE MAIN VALVE BY VENTING THE BONNET TO ATMOSPHERE OR DISCHARGE.

1. Valve closed upstream or downstream of the 116FC. Open as required.
2. Pneumatic pressure still applied to pneumatic valve's actuator (2). Depressurize as required.
3. Stem of pneumatic pilot (2) binding. Disassemble pilot and determine cause.
4. Stem of main valve binding. Disassemble valve and determine cause. See the Model 65 Basic Valve section of this manual.

B. MAIN VALVE FAILS TO CLOSE:

1. Valve closed upstream or downstream of the 116FC. Open as required.
2. Upstream pilot system ball valve (5A) closed. It should be open for normal operation.
3. Pneumatic supply pressure not pressurizing the pneumatic pilot (2). Pressurize as required. (Max. 140 psi).

4. Stem of pneumatic pilot (2) binding. Disassemble and determing cause.

5. Inline strainer or Y-strainer (4) clogged. Clean as required.

6. Stem of main valve binding or ruptured diaphragm. Disassemble valve and determine cause. See the Model 65 Basic Valve section of this manual.

MODEL 116FC

RON
8-5-96

DELUGE VALVE
HYDRAULICALLY OPERATED
(PNEUMATICALLY ACTUATED)

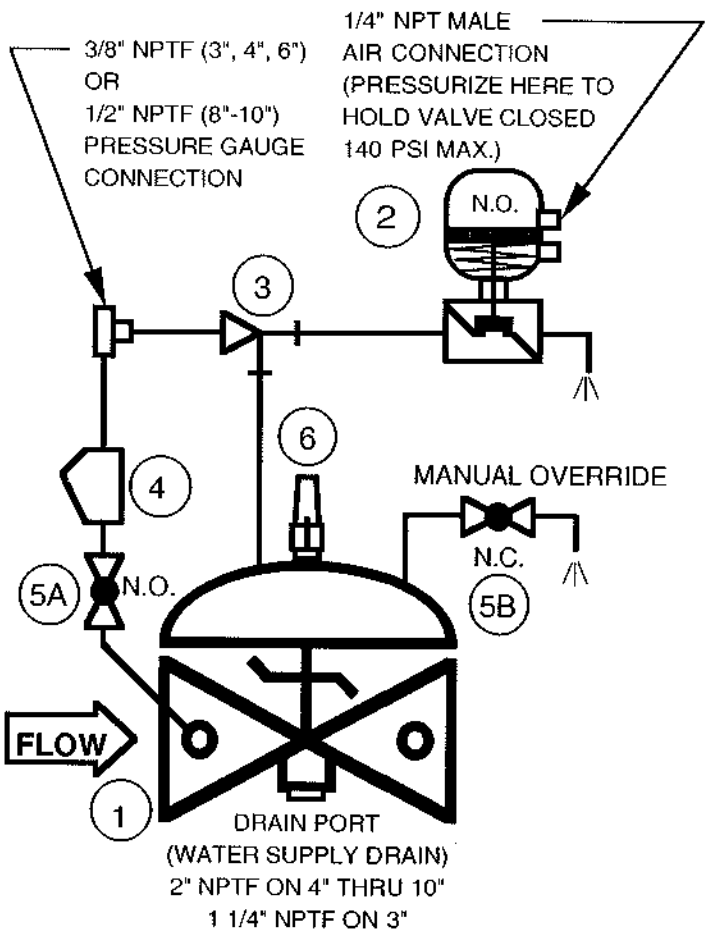

REMOVING AIR PRESSURE FROM 1/4" NPTM CONNECTION CAUSES VALVE TO OPEN.
OPENING BALL VALVE 5B CAUSES VALVE TO OPEN.

ITEM	PART NO.	QTY	DESCRIPTION
1	65FC	1	BASIC VALVE ASSEMBLY (UL LISTED 3" THRU 10")
2	550	1	TWO-WAY PNEUMATIC PILOT, N.O.
3	126	1	EJECTOR
4	159	1	Y-STRAINER
5	141-4	2	BALL VALVE
6	155	1	VISUAL INDICATOR ASSEMBLY

OCV Control Valves

7400 East 42nd Place • Tulsa, Oklahoma 74145-4744 U.S.A.

Phone: 888-628-8258 • 918-627-1942 • Fax: 918-622-8916 • e-mail: ocv@controlvalves.com

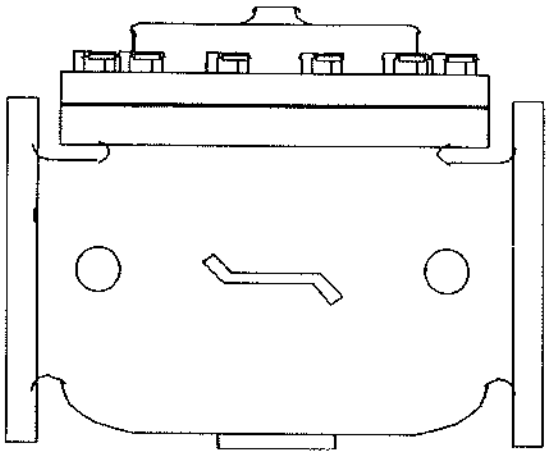

installation, operating, and maintenance instructions

series 65FC

basic *deluge* control valve

GENERAL DESCRIPTION

The OCV Series 65FC is a hydraulically-operated, diaphragm-actuated valve. It is available in the globe configuration and is **UL Listed** for **Deluge service** in sizes 3" thru 10". The diaphragm is nylon-fabric bonded with synthetic rubber and forms a sealed chamber in the upper portion of the valve, separating operating pressure from line pressure. An elastomeric seat disc forms a tight seal with the valve seat when pressure is applied above the diaphragm. A **1 1/4" NPTF** opening is provided for rapid drainage of the main water supply on the 3" valve. A **2" NPTF** opening is provided on the 4" thru 10" valves.

FUNCTIONAL DESCRIPTION

Because the Series 65FC is a hydraulically operated valve, it requires a minimum line pressure of approximately 5 psig in order to function. The valve functions on a simple principle of pressure differential. The line pressure at the inlet of the valve is bypassed through the pilot control piping to the diaphragm chamber of the valve. This pressure, together with the valve spring, works against the pressure under the valve seat. Because the effective area of the diaphragm is greater than that of the seat, the valve is held tightly closed. As the controlling pilot(s) allow the pressure to bleed off the diaphragm chamber, the two opposing pressures begin to balance and the valve will begin to open. The valve can be used to perform a simple on-off function, or with the proper pilot system, a modulating, or regulating function.

In cases where the line fluid is unusually dirty, or is otherwise unsuitable for operating the valve, an independent operating pressure source may be employed. The pressure available from such a source must be equal to, or greater than, line pressure.

INSTALLATION

In order to insure safe, accurate and efficient operation of the OCV control valve, the following list of checkpoints and procedures should be followed when installing the valve.

1. Make a careful visual inspection of the valve to insure that there has been no damage to the external piping, fittings or controls. Check that all fittings are tight.

2. Thoroughly flush all interconnecting piping of chips, scale and foreign matter prior to mounting the valve.

3. Install the valve in the line according to the flow arrow on the inlet flange. The arrow should point downstream.

4. Allow sufficient room around the valve for ease of adjustment and maintenance service.

In addition, it is highly recommended that:

1. When allowed, isolation valves (eg., gate or butterfly) be installed on the inlet and discharge sides of

OCV Control Valves
7400 East 42nd Place / Tulsa, Oklahoma 74145 -4744 USA / (918) 627-1942 / 888-OCV-VALV / FAX 918-622-8916
e-mail: sales@controlvalves.com / website: www/controlvalves.com

the valve to facilitate isolating the valve for maintenance.

2. Pressure gauges be installed at the inlet and outlet sides of the valve to provide monitoring of the valve during initial start-up and during operation. The body side ports, if unused by the pilot system, provide a convenient connection for the gauges.

3. All valves larger than 6" be installed horizontally, i.e., with the bonnet pointed up, for ease of adjustment and maintenance servicing.

MAINTENANCE

The OCV control valve requires no lubrication and a minimum of maintenance. However, a periodic inspection should be established to determine how the fluid being handled is affecting the efficiency of the valve. In a water system, for example, the fluid velocity as well as the substances occurring in natural waters, such as dissolved minerals and suspended particles, vary in every installation. The effect of these actions or substances must be determined by inspection. It is recommended that an annual inspection, which includes examination of the valve interior, be conducted. Particular attention should be paid to the elastomeric parts, i.e., the diaphragm and seat disc. Any obviously worn parts should be replaced.

REPAIR PROCEDURES

In the event of malfunction of the OCV control valve, troubleshooting should be conducted according to the procedures outlined for the specific model of valve. Then, if those steps indicate a problem with the main valve, this section will outline the procedures necessary to correct the problem. **If difficulty in performance is experienced, contact the factory at 1-800-331-4113 or 1-888-OCV-VALV (1-888-628-8258) for a toll free discussion with an engineer, member of the sales staff, or for the name of the closest factory representative for your area.**

Problems with the main valve can be classed in three basic categories:

1. VALVE FAILS TO OPEN
   a. Diaphragm damaged* - See Procedure A
   b. Stem binding - See Procedure B
2. VALVE FAILS TO CLOSE
   a. Diaphragm damaged* - See Procedure A
   b. Stem binding - See Procedure B
   c. Object lodged in valve - See Procedure B
3. VALVE OPENS AND CLOSES BUT LEAKS WHEN CLOSED
   a. Seat disc damaged - See Procedure C
   b. Seat ring damaged - See Procedure D

**A diaphragm failure can prevent the valve from either opening or closing, depending on the flow direction. Most water service valves flow "under the seat", in which case a diaphragm failure will keep the valve from closing.*

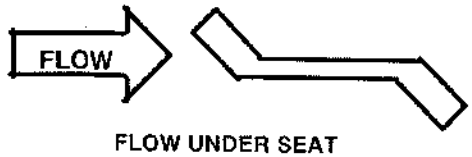

FLOW UNDER SEAT
DIAPHRAGM FAILURE = VALVE FAILS TO CLOSE

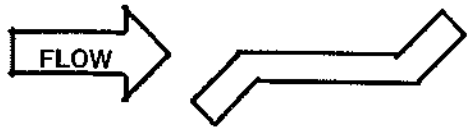

FLOW OVER SEAT
DIAPHRAGM FAILURE = VALVE FAILS TO OPEN

PROCEDURE A : DIAPHRAGM REPLACEMENT

1. Isolate the valve from the system by closing upstream amd downstream block valves.

2. Loosen one of the tubing connections on the

bonnet. Allow any residual pressure to bleed off.

3. Remove all tubing connected at the bonnet.

4. Remove the bonnet nuts.

5. Remove the bonnet. If the bonnet sticks in place, it may be loosened by rapping sharply around its edge with a *rubber-headed* mallet. *NOTE: 8" and larger valves are equipped with eye bolts through which a chain can be fastened to aid in lifting the bonnet.*

6. Remove the spring.

7. Remove the diaphragm plate capscrews and the diaphragm plate.

8. Remove the old diaphragm.

9. Making sure the dowel pin holes are in the proper location, place the new diaphragm over the studs and press down until it is flat against the body and spool.

10. Replace the diaphragm plate and the diaphragm plate capscrews.

11. Tighten all diaphragm plate capscrews snugly.

12. Replace the spring.

13. Replace the bonnet and reinstall the bonnet nuts.

14. Tighten the bonnet nuts snugly using a criss-cross tightening pattern.

15. Reinstall the control tubing.

16. Reopen the upstream and downstream block valves.

17. Before placing the valve back in service, perform the air bleed procedure described in the first section of this manual.

PROCEDURE B: CORRECTION OF BINDING STEM

1. Perform Steps 1 thru 6 of Procedure A, above.

2. Remove the spool assembly from the valve. *NOTE: On smaller valves, this can be accomplished simply by grasping the stem and pulling upward. Valves 6" and larger have the top of the stem threaded to accept an eyebolt to aid in lifting the spool out of the body. 6" thru 10" valves are threaded 3/8-16.*

3. Carefully examine both ends of the stem for deep scratches, scoring or buildup of mineral deposits. Polish the stem if necessary using a fine grade of emery cloth.

4. Similarly, examine and polish the upper bushing (in the bonnet) and the lower guide (in the seat ring).

5. Reinstall the spool assembly.

6. Reassemble the valve, following Steps 12 thru 17 in Procedure A.

PROCEDURE C: SEAT DISC REPLACEMENT

1. Perform Steps 1 and 2 of Procedure B, above.

2. With the spool assembly removed from the body, remove the seat retainer screws.

3. Slide the seat retainer off the lower end of the stem.

4. Remove the seat disc from its groove in the spool. *NOTE: The seat disc may fit quite tightly in the groove. If necessary, it may be pried out using a thin-bladed screwdriver or similar tool.*

5. Install the new seat disc in the groove.

6. Reinstall the seat retainer and tighten the seat retainer screws.

7. Reassemble the valve, following Steps 5 and 6 of Procedure B.

PROCEDURE D: SEAT RING REPLACEMENT

NOTE: It is rare for a seat ring to require replacement. Minor nicks and scratches in the seating surface can usually be smoothed out with emery cloth.

1. Perform Steps 1 and 2 of Procedure B, above.
2. If you are working on a 4" or smaller valve, follow Steps 3 thru 9, below.
3. If you are working on a 6" or larger valve, follow Steps 10 thru 16, below.
4. Seat rings in valves 4" and smaller are threaded into the valve body. To remove, you will need a special seat ring tool. You may fabricate one using standard pipe as shown in the sketch below, or one may be purchased from OCV.
5. Using the seat ring tool, unthread the seat ring from the body.
6. Remove the old o-ring from the counterbore in the body.
7. Install the new o-ring in the counterbore.
8. Using the seat ring tool, install the new seat ring.
9. Reassemble the valve, following Steps 5 & 6 of Procedure B.
10. Seat rings in valves 6" and larger are bolted into the body with socket head capscrews. In addition you will note that the seat ring is equipped with additional threaded holes that may be used for "jacking" the seat ring out of the body.
11. Remove the socket head capscrews.
12. Remove the old seat ring from the body by temporarily installing two or more of the capscrews in the "jacking" holes.
13. Install a new o-ring in the groove of the new seat ring. Lubricate the o-ring and outer seat ring wall with Vaseline® or similar lubricant.
14. Install the new seat ring in the body, making sure that the capscrew holes line up.
15. Replace and tighten all the capscrews.
16. Reassemble the valve, following Steps 5 and 6 of Procedure B.

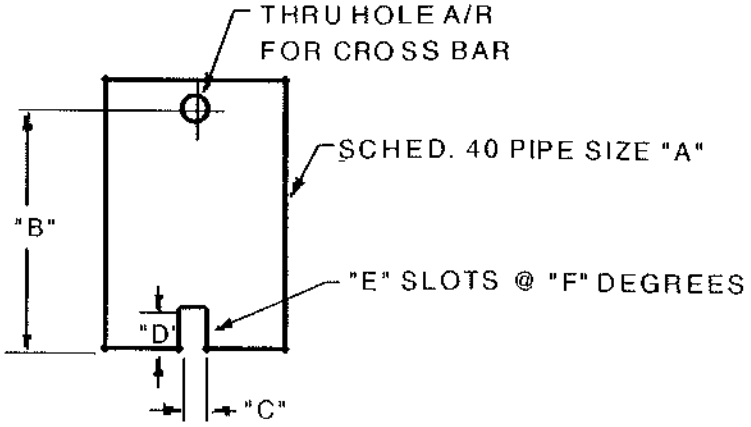

VALVE SIZE	"A" PIPE SIZE	"B" MIN. LENGTH	"C" SLOT WIDTH	"D" SLOT DEPTH	"E" NO. OF SLOTS	"F" SLOT SPACING
1-1/4"	3/4"	6"	3/8"	3/8"	2	180°
1-1/2"	3/4"	6"	3/8"	3/8"	2	180°
2"	1-1/2"	7"	3/8"	3/8"	2	180°
2-1/2"	2"	8"	1/2"	1/2"	3	120°
3"	2-1/2"	9"	5/8"	5/8"	2	180°
4"	3"	10"	5/8"	5/8"	2	180°

REVISED 3-17-97

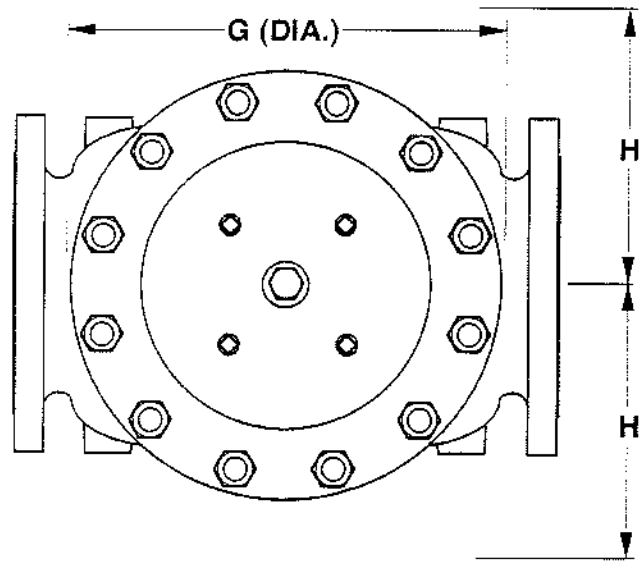

DIM	ANSI CLASS	VALVE SIZE 1 1/4	1 1/2	2	2 1/2	3	4	6	8	10	12	14	16	24
A	S.E	8.75	8.75	9.88	10.50	13.00	–	–	–	–	–	–	–	–
	150	8.50	8.50	9.38	10.50	12.00	15.00	17.75	25.38	29.75	34.00	39.00	40.38	62.00
	300	8.75	8.75	9.88	11.12	12.75	15.62	18.62	26.38	31.12	35.50	40.50	42.00	63.75
B	SE	1.44	1.44	1.69	1.88	2.25	–	–	–	–	–	–	–	–
	150	2.31	2.50	3.00	3.50	3.75	4.50	5.50	6.75	8.00	9.50	10.62	11.75	16.00
	300	2.62	3.06	3.25	3.75	4.12	5.00	6.25	7.50	8.75	10.25	11.50	12.75	18.00
C	SE	4.38	4.38	4.75	6.00	6.50	–	–	–	–	–	–	–	–
	150	4.25	4.25	4.75	6.00	6.00	7.50	10.00	12.69	14.88	17.00	–	20.81	–
	300	4 3/8	4.38	5.00	6.38	6.38	7.81	10.50	13.19	15.56	17.75	–	21.62	–
D	SE	3.12	3.12	3.88	4.00	4.50	–	–	–	–	–	–	–	–
	150	3.00	3.00	3.88	4.00	4.00	5.50	6.00	8.00	11.38	11.00	–	15.69	–
	300	3.25	3.25	4.12	4.38	4.38	5.81	6.50	8.50	12.06	11.75	–	16.50	–
E	ALL	6.00	6.00	6.00	7.00	6.50	7.92	10.00	11.88	15.38	17.00	18.00	19.00	27.00
F	ALL	3.88	3.88	3.88	3.88	3.88	3.88	3.88	6.38	6.38	6.38	6.38	6.38	8.00
G	ALL	6.00	6.00	6.75	7.69	8.75	11.75	14.00	21.00	24.50	28.00	31.25	34.50	52.00
H	ALL	10.00	10.00	11.00	11.00	11.00	12.00	13.00	14.00	17.00	18.00	20.00	20.00	28.50

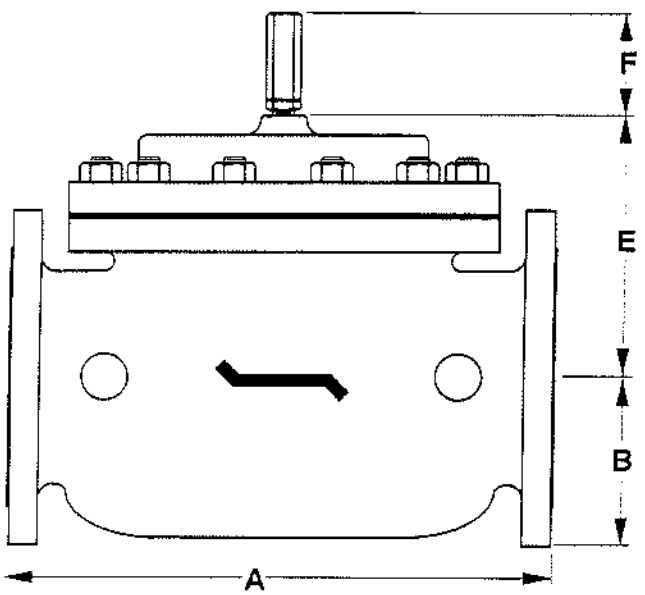

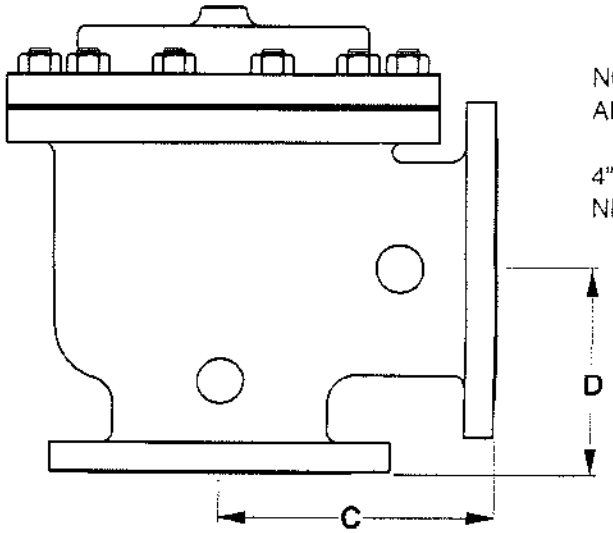

NOTE: 3" VALVE DIMENSIONS ARE FOR NEW MODEL 3100

4" VALVE DIMENSIONS ARE FOR NEW MODEL 4400

REV. A SDJ 6-6-02
REV. B SDJ 2-3-03

TOLERANCES	
UNLESS NOTED	
FRACTIONAL ±1/64	
DECIMAL ±.005	
MACH. FINISH 125√	
ANGULAR ±1/2°	
DRAWN BY SDJ	DATE 10-6-97
CHKD. BY	DATE

OCV Control Valves
TULSA, OKLAHOMA U.S.A.

GENERAL VALVE DIMENSIONS

SIZE	DRAWING NUMBER	REV.
A	65D	B

THIS DRAWING APPLIES TO: 645705
AIR-OPERATED VALVE, TWO-WAY, NORMALLY OPEN

BODY AND INTERNALS:	316 STAINLESS STEEL
SEALS:	PTFE
ACTUATOR HOUSING:	PPS (POLYPHENYLSILOXAN)

PORT SIZE:	1/2"
Cv FACTOR:	4.9
MAXIMUM LINE PRESSURE:	230 PSI
FLUID TEMPERATURE:	32 - 356° F
AMBIENT TEMPERATURE:	14 - 250° F

ACTUATING AIR PRESSURE REQUIREMENTS:

MINIMUM	26 PSI
FOR FULL LINE PRESSURE	46 PSI
MAXIMUM	140 PSI

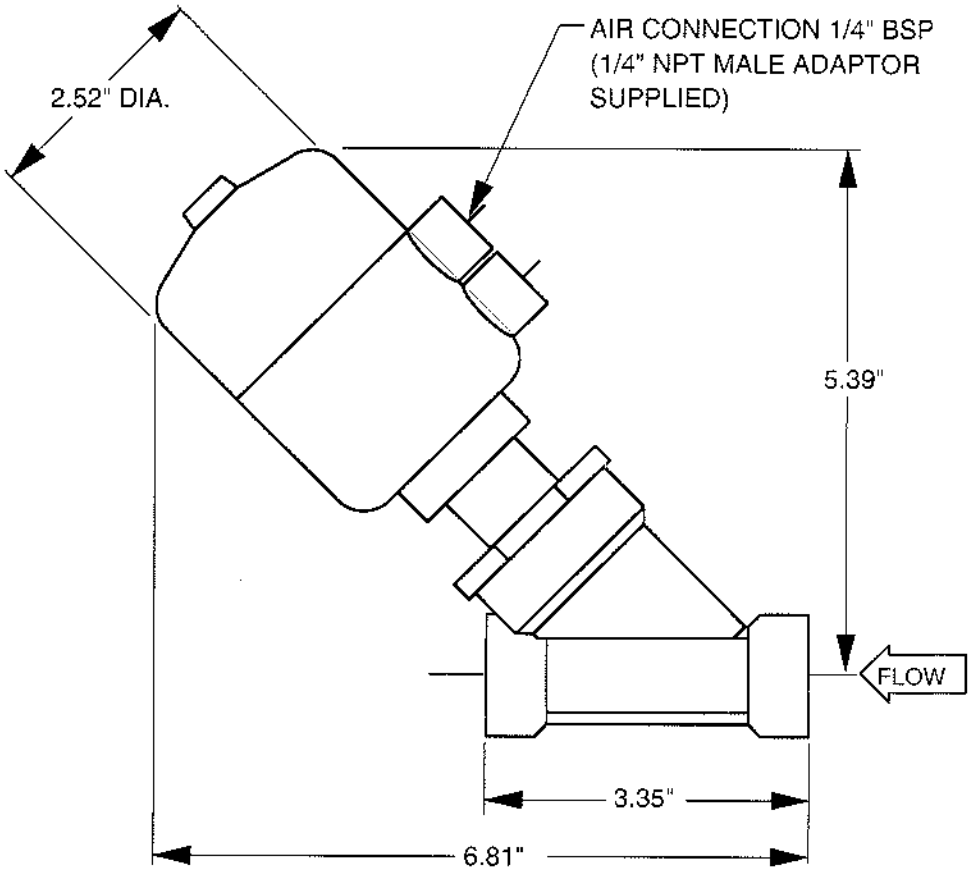

HI-TEMP VERSION

UL LISTED FOR DELUGE SERVICE EXCLUSIVELY FOR OCV Control Valves

SEAWATER AIR VALVE

OCV MODEL 550

CHG	E.C. NO.	DATE	BY

REVISIONS

REF DWG NO'S

MATERIAL	TOLERANCES	
	GENERAL ENVELOPE	
NO. REQ'D	DRAWN BY RON	DATE 7-1-99
SCALE	CHKD. BY	DATE

OCV Control Valves TULSA, OKLAHOMA U.S.A.

PNEUMATIC PILOT (HI-TEMP)
NORMALLY OPEN

SIZE	DRAWING NUMBER	REV.
A	645705 SUB	

DESCRIPTION

MODEL 126 EJECTOR
The Model 126 ejector is a simple tee fitting with a fixed orifice in its inlet port. It provides the proper supply pressure to the main valve diaphragm chamber, allowing various two-way control pilots to control the valve position.

MODEL 126 EJECTOR DIAGRAM

Brass Construction / Stainless Steel Construction

MATERIAL	PART NUMBER	P (NPT)	T-TUBE O.D.	STD. ORIFICE	USED ON VALVE SIZES
Brass	213100	3/8"	3/8"	.125"	1 ¼"-6"
Brass	214100	1/2"	1/2"	.188"	8"-10"
Brass	215100	3/4"	3/4"	.188"	12"-16"
316 Stn. Steel	213700	1/4"	3/8"	.090"	1 ¼"-6"
316 Stn. Steel	214700	3/8"	1/2"	.125"	8"-10"
316 Stn. Steel	215700	1/2"	3/4"	.188"	12"-16"

Orifice bushings are stainless steel.

STAINLESS

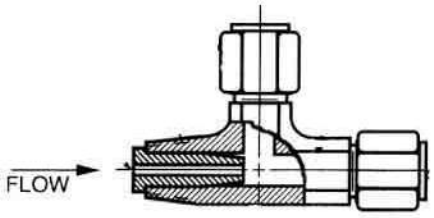

BRASS

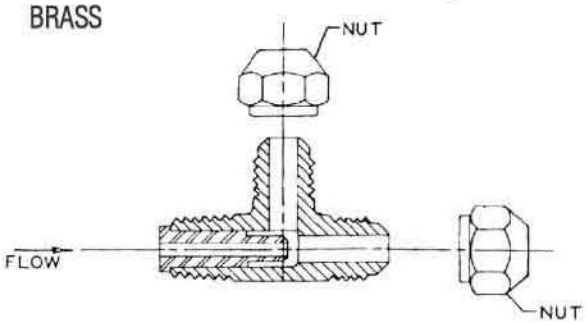

SCHEMATIC SYMBOL

The Model 126 Ejector is shown on OCV Valve Schematics as:

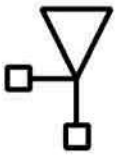

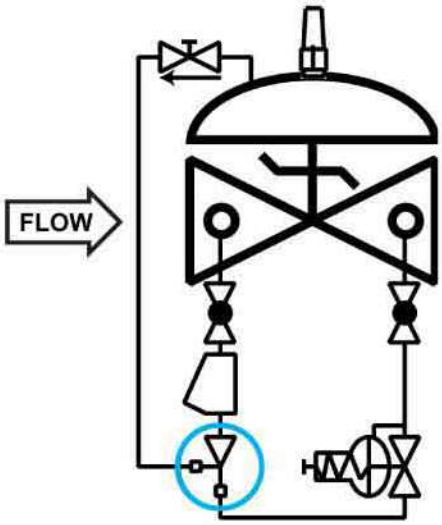

EXAMPLE: Shown here on a MODEL 127-3 Pressure Reducing Valve

TOLL FREE 1.888.628.8258 • **phone:** (918)627.1942 • **fax:** (918)622.8916 • 7400 East 42nd Place, Tulsa, OK 74145
email: sales@controlvalves.com • **website:** www.controlvalves.com

APOLLO®
A DIVISION OF CONBRACO INDUSTRIES, INC

OCV 141-4

PROJECT _____

FEATURES

- Chromium plated ball
- Reinforced TFE seats and stuffing box ring
- Blow-out proof stem design
- Adjustable packing gland

MATERIAL LIST

1.	Lever and Grip	Zinc Plated Steel w/Vinyl
2.	Stem Packing	Reinforced TFE
3.	Stem Bearing	Reinforced TFE
4.	Ball	Chromium Plated Brass
5.	Seat (2)	Reinforced TFE
6.	Retainer	Brass or Bronze - Cast
7.	Gland Nut	Brass
8.	Stem	Brass
9.	Lever Nut	Zinc Plated Steel
10.	Seal (1¼"-3")	TFE
11.	Body	Bronze - Cast

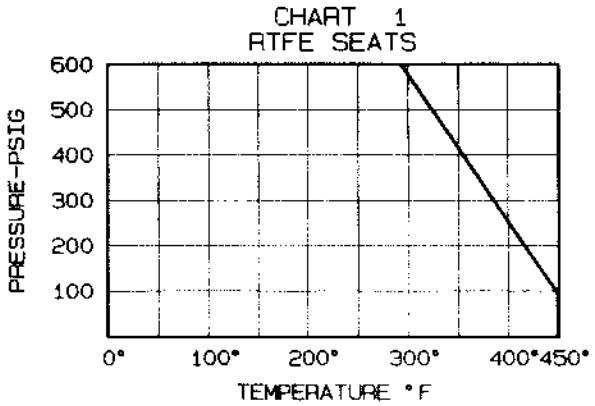

Bronze Ball Valve;
70-100 Series

Threaded, 600 WOG, Cold, Non-Shock
150 PSI Saturated Steam,
Vacuum Service to 29 Inches Hg

FEDERAL SPECIFICATIONS:
WW-V-35C Type: II Composition: BZ
Style: 3

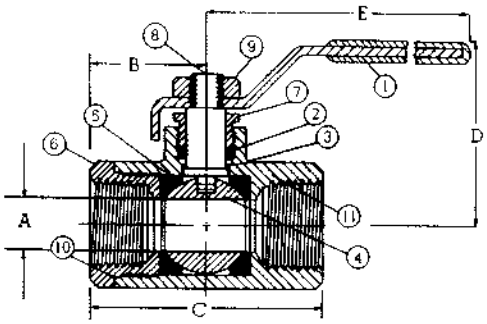

BRONZE THREADED ENDS

NUMBER	SIZE	A	B	C	D	E	Cv*	WT./100
70-101	¼	.37	1.03	2.06	1.75	3.87	6.8	60
70-102	⅜	.37	1.03	2.06	1.75	3.87	6.8	56
70-103	½	.50	1.12	2.25	1.75	3.87	9.8	63
70-104	¾	.68	1.50	3.00	2.12	4.87	25	139
70-105	1	.87	1.68	3.37	2.25	4.87	36	172
70-106	1¼	1.00	2.00	4.00	2.62	5.50	47	326
70-107	1½	1.25	2.18	4.37	3.06	8.00	81	461
70-108	2	1.50	2.34	4.68	3.25	8.00	105	606
70-109	2½	2.50	3.25	6.50	4.12	8.00	440	1725
70-100	3	2.50	3.37	6.75	4.12	8.00	390	1860

*The Cv factor is the gallons of water per minute that the valve will pass with 1 P.S.I. pressure drop.

DESCRIPTION

The Model 141-4 Ball Valve is a ¼-turn shutoff device used for isolating the pilot system from the main valve. They are extremely useful for performing routine maintenance and troubleshooting.

Ball valves are standard on water service valves; optional on fuel service valves.

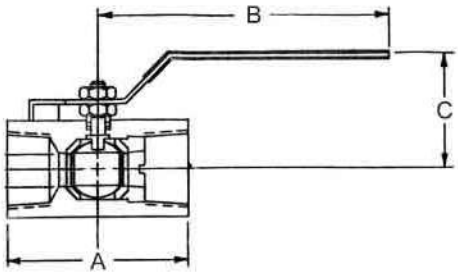

MODEL 141-4 MATRIX

MATERIAL	PART NUMBER	INLET/OUTLET (NPT)	A	B	C	USED ON VALVE SIZE*
Bronze	680100	3/8	1 3/4	3 1/2	1 7/8	1 ¼"-6"
Bronze	680101	1/2	2	3 1/2	2 1/4	8"-10"
Bronze	680102	3/4	3	4 3/4	2 1/4	12"-16"
Stn. Steel	680700	3/8	2	3 3/4	2 1/8	1 ¼"-6"
Stn. Steel	680701	1/2	2 1/4	3 3/4	2 1/2	8"-10"
Stn. Steel	680702	3/4	3	4 3/4	2 1/4	12"-16"

SCHEMATIC SYMBOL

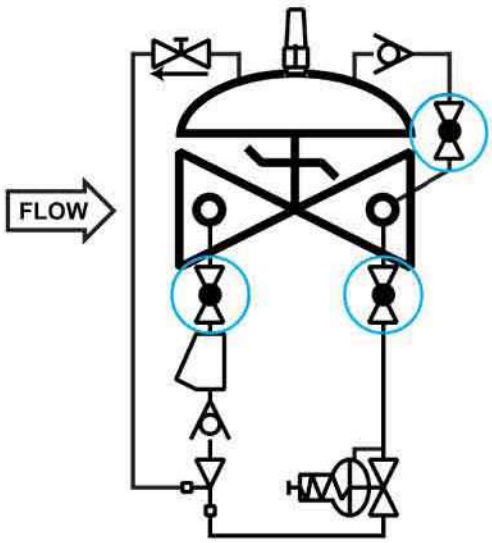

The Model 141-4 Ball Valve is shown on OCV Valve Schematics as:

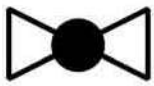

EXAMPLE: Shown here on a MODEL 127-4 Pressure Reducing / Check Valve.

TOLL FREE 1.888.628.8258 • **phone:** (918)627.1942 • **fax:** (918)622.8916 • 7400 East 42nd Place, Tulsa, OK 74145
email: sales@controlvalves.com • **website:** www.controlvalves.com

DESCRIPTION

MODEL 159 Y-STRAINER
The 159 Y-Strainer installs in the inlet piping of the pilot system and protects the pilot system from solid contaminants in the line fluid. It is the standard strainer for water service valves.

MODEL 159 Y-STRAINER MATRIX

MATERIAL	PART NUMBER	INLET/OUTLET (NPT)	BLOW OFF PORT (NP)	A	STD. MESH	USED ON VALVE SIZE
Bronze	660100	3/8	3/8	2 11/16	24	1 ¼"-6"
Bronze	660101	1/2	3/8	2 5/8	24	8"-10"
Bronze	660102	3/4	3/8	3 5/16	24	12"-16"
Stn. Steel	660700	3/8	1/4	2 1/2	20	1 ¼"-6"
Stn. Steel	660701	1/2	1/4	2 1/2	20	8"-10"
Stn. Steel	660702	3/4	1/4	3 1/8	20	12"-16"

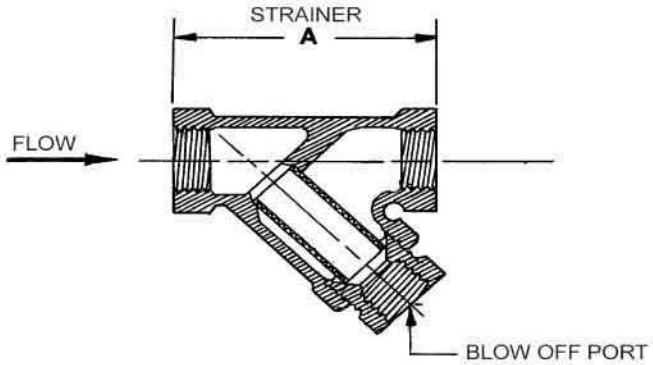

MATERIALS

Bronze, ASTM B62
Optional mesh sizes: 50,100

Stainless Steel, CF8-M (316)
Optional mesh sizes: 60, 80, 100

Screens are stainless steel

SCHEMATIC SYMBOL

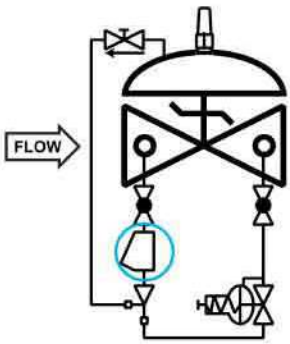

The Model 159 Y-Strainer is shown on OCV Valve Schematics as:

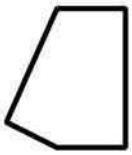

EXAMPLE: Shown here on a MODEL 127-3 Pressure Reducing Valve

MAINTENANCE

Routine cleaning and checking of the Y-Strainer will aid in keeping the control valve functioning properly. Pilot system isolation ball valves are supplied on valves equipped with the Model 159 Y-Strainer. These allow flushing of the screen through the blow off port, or removal of the screen itself for manual cleaning.

TOLL FREE 1.888.628.8258 • **phone:** (918)627.1942 • **fax:** (918)622.8916 • 7400 East 42nd Place, Tulsa, OK 74145
email: sales@controlvalves.com • **website:** www.controlvalves.com

DESCRIPTION

The Model 155 Visual Indicator is a device that enables the user to determine the extent of opening of a control valve. It consists of an adaptor threaded into the center port of the valve bonnet, a rod threaded into the main valve stem, a sealing O-ring, and a protective clear plastic housing. The indicator rod moves as the valve opens and closes. It may be installed on virtually any OCV control valve, and can be done so without any disassembly of the valve itself.

WHERE USED - Standard on Series 94 Check Valves, Series 3330 Altitude Valves, and Series 22 Digital Control Valves. Optional on any other valve not employing a limit switch or position transmitter.

MODEL 155 MATRIX

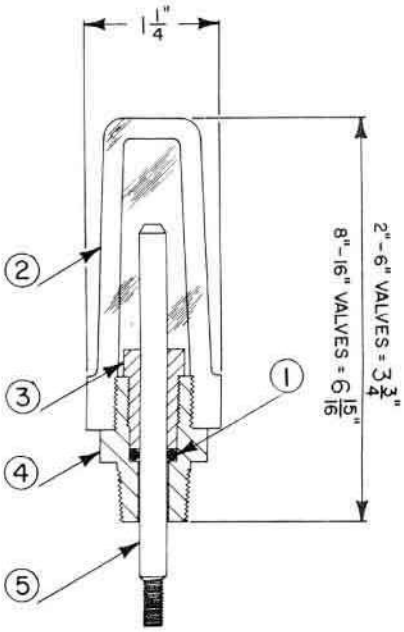

MATERIAL	PART NO. (BRASS\ ADAPTOR)	PART NO. (STAINLESS ADAPTOR)	VALVE TRAVEL (FULL STROKE)
1 1/4" - 1 1/2"	255100	255700	3/8"
2"	255100	255700	1/2"
2 1/2"	255100	255700	3/4"
3"	255100	255700	1"
4"	255101	255701	1 3/8"
6"	255102	255702	1 1/2"
8" - 10"	255103	255703	2 1/2"
12"	255104	255704	3"
14" - 16"	255105	255705	3 1/2", 4"
24"	255109	255709	6"

ITEM	DESCRIPTION
1	O-Ring
2	Housing
3	Bushing
4	Adaptor
5	Stem

SCHEMATIC SYMBOL

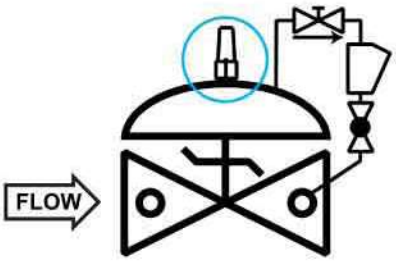

EXAMPLE: Shown here on a Model 94-1 Check Valve

The Model 155 is shown on OCV Valve Schematic as:

MATERIALS

Indicator Rod:	Monel
Adapter:	Brass (std.), Stainless Steel (optional)
Housing:	Butyrate (1 ¼" - 6") Acrylic (8" and larger)
O-Ring:	Viton® (std.) Buna-N, EPDM (optional)

TOLL FREE 1.888.628.8258 • **phone:** (918)627.1942 • **fax:** (918)622.8916 • 7400 East 42nd Place, Tulsa, OK 74145
email: sales@controlvalves.com • **website:** www.controlvalves.com