combination rate-of-flow control and solenoid shutoff valve (energize to open)

installation, operating, and maintenance instructions

model 120-1

GENERAL DESCRIPTION

The OCV Model 120-1 rate-of-flow/solenoid valve is designed to perform the following functions:

1. Control flow at a constant, predetermined rate regardless of fluctuations in upstream or downstream pressure.
2. Open or close in response to an electrical signal.

The 120-1 consists of the following components:

1. **Model 65 Basic Valve**, a hydraulically-operated, diaphragm-actuated, globe or angle valve which closes with an elastomer-on-metal seal.
2. **Model 2450 Rate-of-Flow Control Pilot**, a two-way, normally-open pilot valve which senses the differential pressure created across an orifice plate integrally mounted in the upstream or downstream flange of the main valve and balances it against an adjustable spring load. This differential is proportional to the flow rate through the valve. An increase in differential tends to make the pilot close.
3. **Model 451 Solenoid Pilot**, a two-way, normally-closed, electrically-operated valve. Applying power to the solenoid coil causes this valve to open.
4. **Model 126 Ejector**, a simple "tee" fitting with a fixed orifice in its upstream port. It provides the proper pressure to the diaphragm chamber of the main valve depending on the position of the rate-of-flow control pilot.
5. **Model 141-2 Needle Valve** which controls the opening and closing speed of the main valve.
6. **Model 159 Y-Strainer** (standard on water service valves) or **Model 123 Inline Strainer** (standard on fuel service valves). The strainer protects the pilot system from solid contaminants in the line fluid.

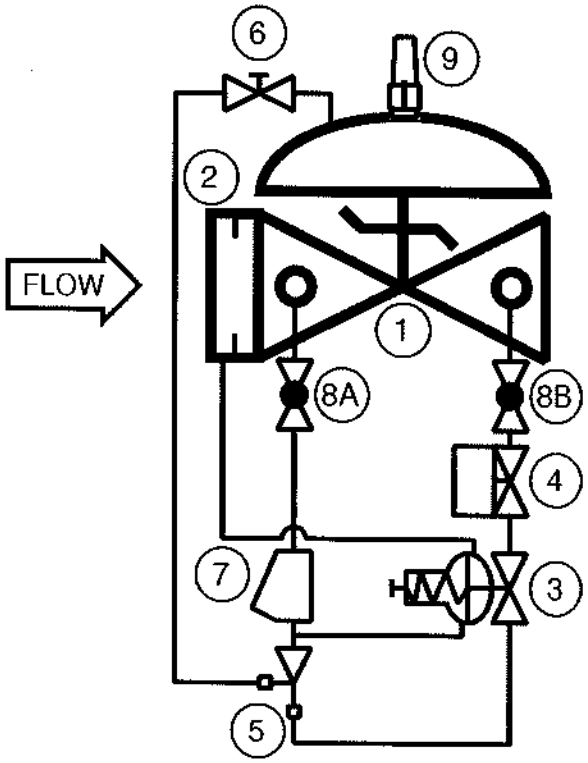

OCV Control Valves
7400 East 42nd Place / Tulsa, Oklahoma 74145 -4744 USA / (918) 627-1942 / 888-OCV-VALV / FAX 918-622-8916
e-mail: sales@controlvalves.com / website: www/controlvalves.com

7. Two **Model 141-4 Ball Valves** (standard on water service valves, optional on fuel service valves), useful for isolating the pilot system for maintenance or troubleshooting.

At user option, the 120-1 may also be equipped with the following:

1. Model 155 Visual Indicator.
2. Model 150 Limit Switch Assembly (includes visual indicator).
3. Model 141-3 Flow Control Valve, set up as a closing speed control or as an opening speed control. Or two 141-3's can be provided to give separate, independent control of both closing and opening speeds.
4. Manual override on solenoid pilot.

THEORY OF OPERATION (refer to schematic diagram):

A. RATE-OF-FLOW CONTROL ACTION:

To understand how the 120-1 operates, it is best to begin with the EJECTOR. Due to the orifice in its upstream port, the ejector creates a pressure drop proportional to the flow through it. The flow through the ejector is in turn controlled by the degree of opening of the RATE-OF-FLOW CONTROL PILOT. The wider the pilot opens, the greater the flow through the ejector and the lower the pressure downstream of the orifice. Conversely, the more the pilot closes, the lower the flow through the ejector and the greater the pressure downstream of the orifice.

Now note that the main valve diaphragm chamber is connected at the branch port of the ejector, which is downstream of the orifice. In this manner, the pressure in the diaphragm chamber of the main valve is in fact controlled by the rate-of-flow control pilot. As the diaphragm pressure decreases, the main valve opens; as the diaphragm pressure increases, the main valve closes.

The rate-of-flow control pilot is sensing the differential pressure, proportional to flow rate, across the integrally-mounted orifice plate. As this differential tends to increase above the set point of the rate-of-flow control pilot, the pilot moves further closed. This results in an increase in pressure in the diaphragm chamber of the main valve. The main valve then closes slightly to restore the flow rate to the set point. Conversely, as the differential tends to decrease below the set point, the pilot moves further open. This results in a decrease in pressure in the diaphragm chamber of the main valve. The main valve then opens wider to bring the flow rate back up to the set point. The net result of all this is a constant modulating action by the pilot and main valve and a flow rate which remains constant despite fluctuations in inlet or outlet pressure.

B. ELECTRICAL ON-OFF ACTION:

When the coil of the solenoid pilot is deenergized, the pilot is closed. This completely blocks the pilot system and allows full inlet pressure to build up in the diaphragm chamber of the main valve. Thus the main valve remains tightly closed. However, if the coil is energized, the pilot opens fully, which allows the main valve to open and come under control of the reducing pilot as described above.

INSTALLATION

The 120-1 is furnished fully factory-assembled and ready for installation at the appropriate point in the system. The user is referred to the Basic Valve section of this manual for full installation details.

Before installing the valve, check to see which flange contains the orifice plate. If the plate is in the inlet flange, it is recommended that at least **five diameters** of straight pipe be allowed upstream of the valve.

Once the main valve is installed, the solenoid pilot is wired into the control system. This is a simple two-wire hookup.

STARTUP AND ADJUSTMENT

The following procedures should be followed in the order presented in order to effect an initial startup of the 120-1.

1. Install some means of measuring flow in series with the 120-1.

2. Remove the plastic cap from the rate-of-flow control pilot. Turn the adjusting screw **counterclockwise** until it is loose enough to be turned by hand.
3. Turn the adjusting screw of the needle valve fully **clockwise**, then back it off **three full turns**.
4. Start the pump, or otherwise start the system flowing. The main valve will at this time be fully closed.
5. Energize the solenoid pilot. The main valve should remain oclosed or open only a very small amount.
6. Carefully loosen one of the pipe plugs in the main valve bonnet until fluid appears around the threads. When only clear fluid (no air) is discharging, retighten the plug.
7. Slowly turn the adjusting screw of the rate-of-flow control pilot **clockwise** until flow rate increases to the desired set point. Replace the plastic cap.
8. If there are small-scale oscillations in the flow, slowly turn the adjusting screw of the needle valve **clockwise** until the oscillations disappear. CAUTION: Never close this valve fully. To do so will prevent the main valve from operating.
9. Deenergize the solenoid pilot and observe that the valve closes.
10. If flow rate readjustment should ever be required, the rate-of-flow pilot is adjusted **clockwise** to **increase** flow rate; **counterclockwise** to **decrease** flow rate.

MAINTENANCE

Because of the simplicity of design of the 120-1, required maintenance is minimal. However, the following checks, periodically performed, can do much to keep the valve operating properly and efficiently.

1. Check for chipped or peeling paint. Touch up as required.
2. Check for leaks at fittings and around flanges and connections. Tighten as required.
3. Check for frayed or loose electrical connections.
4. If the valve is equipped with a Y-strainer, check the screen for buildup of solid material. Clean as required. This point is most important, as a clogged strainer can keep the valve from operating properly. On new installations, it is recommended that the strainer be checked every day or two until experience dictates a greater or lesser interval. Strainer maintenance is covered in detail on a special page later in this manual.

TROUBLESHOOTING

In the event of malfunction of the 120-1, the following guide should enable the technician to isolate the specific cause of the problem and take the appropriate corrective action.

A. MAIN VALVE FAILS TO OPEN:

1. Valve closed downstream of the 120-1. Open as required.
2. Downstream pilot system ball valve closed. Open as required.
3. Solenoid not energized. Check electrical system.
4. Needle valve fully closed. See Adjustment instructions.
5. Rate-of-flow control pilot adjusted too far counterclockwise. See adjustment instructions.
6. Solenoid pilot stuck closed or coil burned out. See Solenoid Valve section of this manual.
7. Stem of rate-of-flow control pilot binding. See 2450 section of this manual.
8. Stem of main valve binding. See the Model 65 Basic Valve section of this manual.

B. MAIN VALVE FAILS TO CLOSE:

1. Upstream pilot system ball valve closed. Open as required.
2. Solenoid not deenergized. Check electrical system.
3. Strainer clogged. Clean as required.
4. Close downstream pilot system ball valve.

a. If main valve closes, proceed to Step 5.

b. If main valve remains open, proceed to Step 6.

5. Solenoid pilot stuck open. See Solenoid Valve section of this manual.

6. Close both pilot system ball valves and loosen a pipe plug in the main valve bonnet. A **continuous** discharge of fluid from the loosened plug indicates that the main valve diaphragm is ruptured. Replace diaphragm. See the Model 65 Basic valve section of this manual.

NOTE: Certain valves, predominantly those in fuel service, are assembled "fail closed." In this case, a ruptured diaphragm would keep the valve from opening, rather than keep it from closing. To determine which type you have, examine the "bridge mark" cast into the side of the main valve body and compare it with the diagram below. If the bridge mark slants **downward** on the upstream end, the valve is "fail closed." If the bridge mark slants **upward** on the upstream end, the valve is "fail open."

7. Main valve stem binding or object in valve. Disassemble valve and determine cause. See Basic Valve section of this manual.

C. MAIN VALVE OPENS AND CLOSES, BUT DOES NOT CONTROL FLOW.

1. If flow rate remains **too high** despite adjustment of the rate-of-flow pilot, the pilot diaphragm may be ruptured or its stem may be binding. Disassemble pilot and determine cause. See 2450 section of this manual.

2. If flow rate remains **too low** despite adjustment of the rate-of-flow pilot, close the upstream pilot system ball valve.

   a. If flow rate increases, proceed to Step 3.

   b. If flow rate does not increase, proceed to Step 4.

3. Stem of rate-of-flow pilot binding. Disassemble pilot and determine cause. See 2450 section of this manual.

4. Chances are this is all the flow the system can handle at the present time. Either the supply system (e.g. pump) is not sufficient for the task, or the demand is not great enough. To verify this, carefully loosen a pipe plug in the main valve bonnet, and let the diaphragm chamber bleed to atmosphere.

   a. If flow rate remains the same, the "problem" **is** system-related.

   b. If flow rate increases, consult factory.

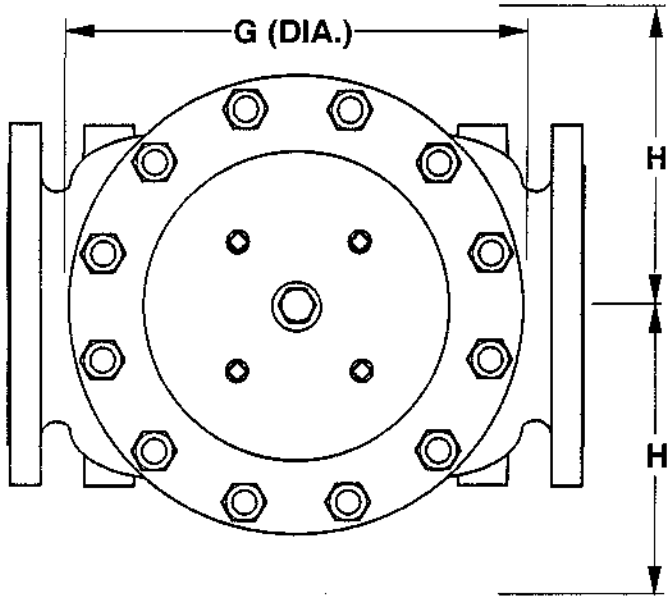

DIM	ANSI CLASS	VALVE SIZE 1 1/4	1 1/2	2	2 1/2	3	4	6	8	10	12	14	16	24
A	S.E	8.75	8.75	9.88	10.50	13.00	–	–	–	–	–	–	–	–
	150	8.50	8.50	9.38	10.50	12.00	15.00	17.75	25.38	29.75	34.00	39.00	40.38	62.00
	300	8.75	8.75	9.88	11.12	12.75	15.62	18.62	26.38	31.12	35.50	40.50	42.00	63.75
B	SE	1.44	1.44	1.69	1.88	2.25	–	–	–	–	–	–	–	–
	150	2.31	2.50	3.00	3.50	3.75	4.50	5.50	6.75	8.00	9.50	10.62	11.75	16.00
	300	2.62	3.06	3.25	3.75	4.12	5.00	6.25	7.50	8.75	10.25	11.50	12.75	18.00
C	SE	4.38	4.38	4.75	6.00	6.50	–	–	–	–	–	–	–	–
	150	4.25	4.25	4.75	6.00	6.00	7.50	10.00	12.69	14.88	17.00	–	20.81	–
	300	4 3/8	4.38	5.00	6.38	6.38	7.81	10.50	13.19	15.56	17.75	–	21.62	–
D	SE	3.12	3.12	3.88	4.00	4.50	–	–	–	–	–	–	–	–
	150	3.00	3.00	3.88	4.00	4.00	5.50	6.00	8.00	11.38	11.00	–	15.69	–
	300	3.25	3.25	4.12	4.38	4.38	5.81	6.50	8.50	12.06	11.75	–	16.50	–
E	ALL	6.00	6.00	6.00	7.00	6.50	7.92	10.00	11.88	15.38	17.00	18.00	19.00	27.00
F	ALL	3.88	3.88	3.88	3.88	3.88	3.88	3.88	6.38	6.38	6.38	6.38	6.38	8.00
G	ALL	6.00	6.00	6.75	7.69	8.75	11.75	14.00	21.00	24.50	28.00	31.25	34.50	52.00
H	ALL	10.00	10.00	11.00	11.00	11.00	12.00	13.00	14.00	17.00	18.00	20.00	20.00	28.50

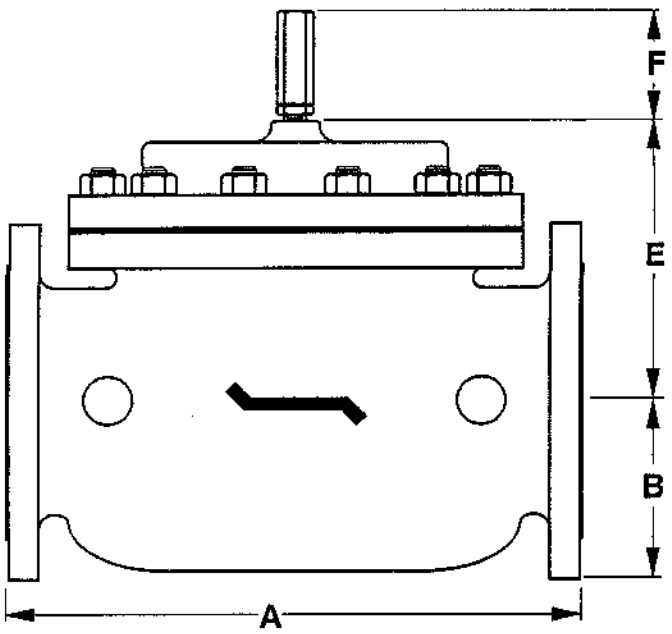

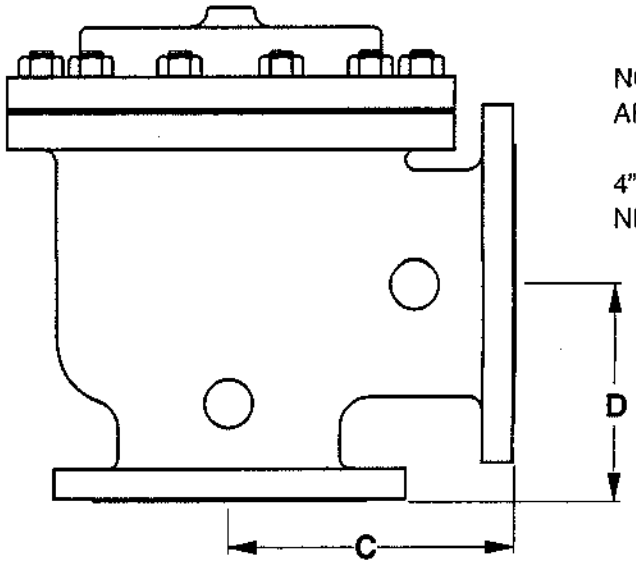

NOTE: 3" VALVE DIMENSIONS ARE FOR NEW MODEL 3100

4" VALVE DIMENSIONS ARE FOR NEW MODEL 4400

REV. A SDJ 6-6-02
REV. B SDJ 2-3-03

TOLERANCES	
UNLESS NOTED FRACTIONAL ±1/64 DECIMAL ±.005 MACH. FINISH 125√ ANGULAR ±1/2°	
DRAWN BY SDJ	DATE 10-6-97
CHKD. BY	DATE

OCV Control Valves
TULSA, OKLAHOMA U.S.A.

GENERAL VALVE DIMENSIONS

SIZE	DRAWING NUMBER	REV.
A	65D	B

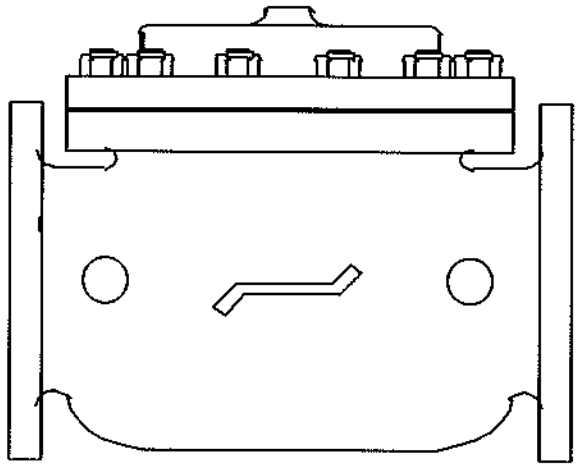

installation, operating, and maintenance instructions

series 65

basic control valve

GENERAL DESCRIPTION

The OCV Series 65 is a hydraulically-operated, diaphragm-actuated valve. It is available in either a globe (Model 65) or angle (Model 65A) configuration. The diaphragm is nylon-fabric bonded with synthetic rubber and forms a sealed chamber in the upper portion of the valve, separating operating pressure from line pressure. An elastomeric seat disc forms a tight seal with the valve seat when pressure is applied above the diaphragm.

FUNCTIONAL DESCRIPTION

Because the Series 65 is a hydraulically operated valve, it requires a minimum line pressure of approximately 5 psig in order to function. The valve functions on a simple principle of pressure differential. The line pressure at the inlet of the valve is bypassed through the pilot control piping to the diaphragm chamber of the valve. This pressure, together with the valve spring, works against the pressure under the valve seat. Because the effective area of the diaphragm is greater than that of the seat, the valve is held tightly closed. As the controlling pilot(s) allow the pressure to bleed off the diaphragm chamber, the two opposing pressures begin to balance and the valve will begin to open. The valve can be used to perform a simple on-off function, or with the proper pilot system, a modulating, or regulating function.

In cases where the line fluid is unusually dirty, or is otherwise unsuitable for operating the valve, an independent operating pressure source may be employed. The pressure available from such a source must be equal to, or greater than, line pressure.

INSTALLATION

In order to insure safe, accurate and efficient operation of the OCV control valve, the following list of checkpoints and procedures should be followed when installing the valve.

1. Make a careful visual inspection of the valve to insure that there has been no damage to the external piping, fittings or controls. Check that all fittings are tight.
2. Thoroughly flush all interconnecting piping of chips, scale and foreign matter prior to mounting the valve.
3. Install the valve in the line according to the flow arrow on the inlet flange. The arrow should point downstream.
4. Allow sufficient room around the valve for ease of adjustment and maintenance service.

In addition, it is highly recommended that:

1. Isolation valves (eg., gate or butterfly) be installed on the inlet and discharge sides of the valve to facilitate isolating the valve for maintenance.
2. Pressure gauges be installed at the inlet and outlet sides of the valve to provide monitoring of the valve during initial start-up and during operation. The body side ports, if unused by the pilot system, provide a convenient connection for the gauges.
3. All valves larger than 6" be installed horizontally, i.e., with the bonnet pointed up, for ease of adjustment and maintenance servicing.

MAINTENANCE

The OCV control valve requires no lubrication and a minimum of maintenance. However, a periodic inspection should be established to determine how the fluid being handled is affecting the efficiency of the valve. In a water system, for example, the fluid velocity as well as the substances occurring in natural waters, such as dissolved minerals and suspended particles, vary in every installation. The effect of these actions or substances must be determined by inspection. It is recommended that an annual inspection, which includes ex-

OCV Control Valves
7400 East 42nd Place / Tulsa, Oklahoma 74145 -4744 USA / (918) 627-1942 / 888-OCV-VALV / FAX 918-622-8916
e-mail: sales@controlvalves.com / website: www/controlvalves.com

amination of the valve interior, be conducted. Particular attention should be paid to the elastomeric parts, i.e., the diaphragm and seat disc. Any obviously worn parts should be replaced.

REPAIR PROCEDURES

In the event of malfunction of the OCV control valve, troubleshooting should be conducted according to the procedures outlined for the specific model of valve. Then, if those steps indicate a problem with the main valve, this section will outline the procedures necessary to correct the problem.

Problems with the main valve can be classed in three basic categories:

1. VALVE FAILS TO OPEN
   a. Diaphragm damaged* - See Procedure A
   b. Stem binding - See Procedure B
2. VALVE FAILS TO CLOSE
   a. Diaphragm damaged* - See Procedure A
   b. Stem binding - See Procedure B
   c. Object lodged in valve - See Procedure B
3. VALVE OPENS AND CLOSES BUT LEAKS WHEN CLOSED
   a. Seat disc damaged - See Procedure C
   b. Seat ring damaged - See Procedure D

   **A diaphragm failure can prevent the valve from either opening or closing, depending on the flow direction. Most water service valves flow "under the seat", in which case a diaphragm failure will keep the valve from closing. On the other hand, most fuel service valves flow "over the seat", in which case a diaphragm failure will keep the valve from opening. To determine which you have, examine the bridge mark cast into the side of the valve body, then compare it with the figures below.*

PROCEDURE A : DIAPHRAGM REPLACEMENT

1. Isolate the valve from the system by closing upstream amd downstream block valves.
2. Loosen one of the tubing connections on the bonnet. Allow any residual pressure to bleed off.
3. Remove all tubing connected at the bonnet.
4. Remove the bonnet nuts.
5. Remove the bonnet. If the bonnet sticks in place, it may be loosened by rapping sharply around its edge with a *rubber-headed* mallet. *NOTE: 8" and larger valves are equipped with eye bolts through which a chain can be fastened to aid in lifting the bonnet.*
6. Remove the spring.
7. Remove the diaphragm plate capscrews and the diaphragm plate.
8. Remove the old diaphragm.
9. Making sure the dowel pin holes are in the proper location, place the new diaphragm over the studs and press down until it is flat against the body and spool.
10. Replace the diaphragm plate and the diaphragm plate capscrews.
11. Tighten all diaphragm plate capscrews snugly.
12. Replace the spring.
13. Replace the bonnet and reinstall the bonnet nuts.
14. Tighten the bonnet nuts snugly using a criss-cross tightening pattern.
15. Reinstall the control tubing.
16. Reopen the upstream and downstream block valves.
17. Before placing the valve back in service, perform the air bleed procedure described in the first section of this manual.

PROCEDURE B: CORRECTION OF BINDING STEM

1. Perform Steps 1 thru 6 of Procedure A, above.
2. Remove the spool assembly from the valve. *NOTE:*

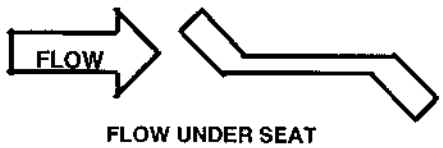

FLOW UNDER SEAT
DIAPHRAGM FAILURE = VALVE FAILS TO CLOSE

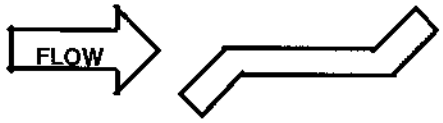

FLOW OVER SEAT
DIAPHRAGM FAILURE = VALVE FAILS TO OPEN

On smaller valves, this can be accomplished simply by grasping the stem and pulling upward. Valves 6" and larger have the top of the stem threaded to accept an eyebolt to aid in lifting the spool out of the body. 6" thru 12" valves are threaded 3/8-16. 14" and 16" valves are threaded 5/8-11.

3. Carefully examine both ends of the stem for deep scratches, scoring or buildup of mineral deposits.

Polish the stem if necessary using a fine grade of emery cloth.

4. Similarly, examine and polish the upper bushing (in the bonnet) and the lower guide (in the seat ring).
5. Reinstall the spool assembly.
6. Reassemble the valve, following Steps 12 thru 17 in Procedure A.

PROCEDURE C: SEAT DISC REPLACEMENT

1. Perform Steps 1 and 2 of Procedure B, above.
2. With the spool assembly removed from the body, remove the seat retainer screws.
3. Slide the seat retainer off the lower end of the stem.
4. Remove the seat disc from its groove in the spool. *NOTE: The seat disc may fit quite tightly in the groove. If necessary, it may be pried out using a thin-bladed screwdriver or similar tool.*
5. Install the new seat disc in the groove.
6. Reinstall the seat retainer and tighten the seat retainer screws.
7. Reassemble the valve, following Steps 5 and 6 of Procedure B.

PROCEDURE D: SEAT RING REPLACEMENT

NOTE: It is rare for a seat ring to require replacement. Minor nicks and scratches in the seating surface can usually be smoothed out with emery cloth.

1. Perform Steps 1 and 2 of Procedure B, above.
2. If you are working on a 4" or smaller valve, follow Steps 3 thru 9, below.
3. If you are working on a 6" or larger valve, follow Steps 10 thru 16, below.
4. Seat rings in valves 4" and smaller are threaded into the valve body. To remove, you will need a special seat ring tool. You may fabricate one using standard pipe as shown in the sketch below, or one may be purchased from OCV.
5. Using the seat ring tool, unthread the seat ring from the body.
6. Remove the old o-ring from the counterbore in the body.
7. Install the new o-ring in the counterbore.
8. Using the seat ring tool, install the new seat ring.
9. Reassemble the valve, following Steps 5 & 6 of Procedure B.
10. Seat rings in valves 6" and larger are bolted into the body with socket head capscrews. In addition you will note that the seat ring is equipped with additional threaded holes that may be used for "jacking" the seat ring out of the body.
11. Remove the socket head capscrews.
12. Remove the old seat ring from the body by temporarily installing two or more of the capscrews in the "jacking" holes.
13. Install a new o-ring in the groove of the new seat ring. Lubricate the o-ring and outer seat ring wall with Vaseline® or similar lubricant.
14. Install the new seat ring in the body, making sure that the capscrew holes line up.
15. Replace and tighten all the capscrews.
16. Reassemble the valve, following Steps 5 and 6 of Procedure B.

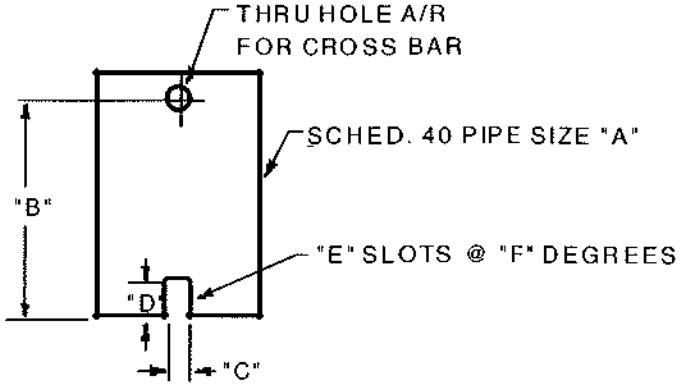

VALVE SIZE	"A" PIPE SIZE	"B" MIN. LENGTH	"C" SLOT WIDTH	"D" SLOT DEPTH	"E" NO. OF SLOTS	"F" SLOT SPACING
1-1/4"	3/4"	6"	3/8"	3/8"	2	180°
1-1/2"	3/4"	6"	3/8"	3/8"	2	180°
2"	1-1/2"	7"	3/8"	3/8"	2	180°
2-1/2"	2"	8"	1/2"	1/2"	3	120°
3"	2-1/2"	9"	5/8"	5/8"	2	180°
4"	3"	10"	5/8"	5/8"	2	180°

REVISED 3-17-97

rate of flow control pilot

installation, operating, and maintenance instructions

model 2450

GENERAL DESCRIPTION

The OCV Model 2450 Rate of Flow Control Pilot is a direct-acting, spring-loaded, diaphragm-type control pilot. It is available in bronze or stainless steel (stainless steel internals) construction, with either Buna-N or Viton elastomers. It is designed to maintain a constant, preset rate of flow through the main valve. It is manually adjustable by means of an adjusting screw located on top of the pilot. The 2450 is a constant-throttling device, maintaining precise, positive control of the main valve.

FUNCTIONAL DESCRIPTION

Basically, the 2450 controls the amount of pressure in the uper chamber of the main valve, hence the degree of opening or closing of the valve. The pilot senses the pressure differential across an orifice plate located on the inlet of the main valve. The upstream, or high pressure, side of the orifice plate is sensed under the pilot diaphragm and the downstream, or low pressure, is sensed above the diaphragm. The low pressure sense is assisted by the pilot spring. As the flow through the orifice plate increases, the differential pressure increases and begins to close the pilot. As the pilot closes, the pressure in the upper chamber of the main valve increases, causing the valve to close a proportionate amount in order to maintain the preset rate of flow. Conversely, as the rate of flow decreases, the pilot opens, allowing the main valve to open and compensate for the decrease in flow.

INSTALLATION AND ADJUSTMENT

The 2450 should be installed in the main valve control piping between either the ejector or the accelerator pilot (depending on valve model) and the downstream body tap. Flow should be in the direction indicated on the pilot body. Sensing lines (1/4" O.D. tubing) are installed from the downstream orifice flange tap to the upper sense tap of the pilot and from the upstream orifice flange tap to the lower sense tap of the pilot. Pilot adjustment is made with the adjusting screw located on top of the bonnet. Increase flow through the valve by turning the screw clockwise; decrease flow by turning the screw counterclockwise.

MAINTENANCE

Because of the simplicity of design of the 2450 pilot, required maintenance is minimal. Fitting and bolts should be periodically checked for tightness and the body should be inspected for damage or excessive buildup of foreign material.

TROUBLESHOOTING

Troubleshooting of the 2450 is equally simple. Major troubleshooting points are as follows:

1. To check for ruptured diaphragm, disconnect the low pressure sense line from both the pilot and the valve flange. Plug the flange tap and pressurize the valve. A continuous discharge of fluid at the open sense port indicates a ruptured diaphragm.
2. An indication of the pilot stem binding may be checked by removing the pilot bonnet and moving the stem by hand. If excessive drag is evident, disassemble and pilot and determine the cause.
3. An erratic pilot action can result from a blockage in the port area of the valve stem or in the counterbalance area. Detach the sense line on the bottom plug and remove the plug. Clean out the counterbalance chamber as required. To remove the stem, hold the bottom of the stem with screwdriver in slot and remove the screw securing the diaphragm plates. The seat/stem assembly may now be removed through the bottom body port. Clean as necessary.

OCV Control Valves
7400 East 42nd Place / Tulsa, Oklahoma 74145 -4744 USA / (918) 627-1942 / 888-OCV-VALV / FAX 918-622-8916
e-mail: sales@controlvalves.com / website: www/controlvalves.com

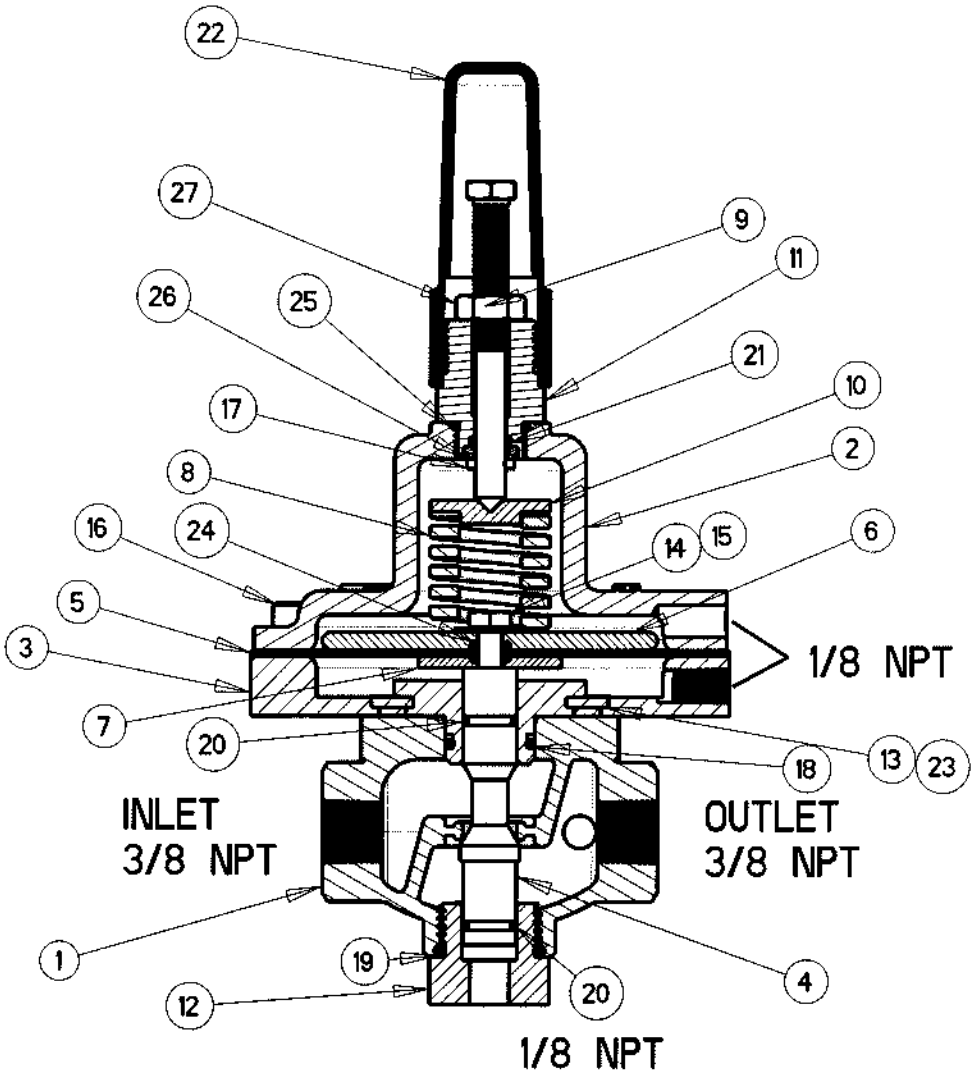

ITEM	PART NO.	QTY	DESCRIPTION	MATERIAL
27	590717	1	HEX NUT	STN. STEEL
26	320718	1	BUSHING	STN. STEEL
25	610017	1	O-RING	BUNA-N
24	611010	1	O-RING	VITON
23	611011	4	O-RING	VITON
22	692002	1	CAP	BUTYRATE
21	611011	1	O-RING	VITON
20	611013	2	O-RING	VITON
19	610912	1	O-RING	BUNA-N
18	611116	1	O-RING	VITON
17	620712	1	CODDER PIN	STN. STELL
16	530701	8	SKT HD CAPSCREW	STN. STEEL
15	685700	1	LOCK WASHER	STN. STEEL
14	531700	1	HEX HD CAPSCREW	STN. STEEL
13	532702	4	FLAT HD SCREW	STN. STEEL
12	310725	1	PLUG	STN. STEEL
11	320816	1	ADJUSTING SCREW ADAP.	STN. STEEL
10	300710	1	SPRING RETAINER	STN. STEEL
9	320724	1	ADJUSTING SCREW	STN. STEEL
8	651408	1	SPRING	CR-V STEEL
7	308702	1	LOWER DIAPH. PLATE	STN. STEEL
6	308720	1	UPPER DIAPH. PLATE	STN. STEEL
5	694004	1	DIAPHRAGM	BUNA-N/NYLON
4	314720	1	STEM	STN. STEEL
3	300706	1	ADAPTER	STN. STEEL
2	304730	1	BONNET	STN. STEEL
1	302702	1	BODY	STN. STEEL

CHG	ECN	DATE	BY	REVISIONS
E				
D				
C				
B				
A				

REF DWG NO'S

MATERIAL

NO. REQ'D

SCALE 1/2

TOLERANCES

UNLESS NOTED
.XX ±.015
.XXX ±.005
ANGULAR ±0.5°
MACH. FINISH 125

DRAWN BY	DATE
B.K.	11-9-07
CHKD BY	DATE

OCV Control Valves

TULSA OKLAHOMA USA

RATE-OF-FLOW CONTROL PILOT

SIZE	DRAWING NUMBER	REV
A	2450	

INSTALLATION & MAINTENANCE INSTRUCTIONS

ASCO.

2-WAY INTERNAL PILOT-OPERATED SOLENOID VALVES

NORMALLY CLOSED OPERATION

1/2" AND 3/4" NPT - 5/8" ORIFICE

BULLETINS

8210

8211

Form No. V5827R1

DESCRIPTION

Bulletin 8210's are 2-way normally closed, internal pilot- operated solenoid valves, and are made of stainless steel. Standard valves have a General Purpose Type I Solenoid Enclosure.

Bulletin 8211's are the same as Bulletin 8210's except for the solenoid enclosure. Bulletin 8211's have a combination Watertight and Explosion-Proof Solenoid Enclosure designed to meet Enclosure Type 4-Watertight, Type 7 (C and D) Explosion- Proof Class I, Groups C and D and Type 9 (E,F & G) Dust Ignition- Proof Class II, Groups E,F and G. Installation and maintenance instructions for the watertight and explosion-proof solenoid enclosure are on Form No.V5380.

OPERATION

Normally Closed: Valve is closed when solenoid is de-energized; open when energized.

Manual Operator (Optional)

Valves with suffix "MO" in catalog number are provided with a manual operator which allows manual operation when desired or during an interruption of electrical power. To operate valve manually, rotate stem clockwise 180°. Disengage manual operator by rotating stem counterclockwise 180° before operating electrically.

INSTALLATION

Check nameplate for correct catalog number, pressure, voltage, frequency, and service.

Temperature Limitations

For maximum valve ambient and fluid temperatures, refer to chart below. Check catalog number prefix on nameplate to determine maximum temperatures.

CONSTRUCTION	COIL CLASS	CATALOG NUMBER PREFIX	MAXIMUM AMBIENT TEMP. °F	MAXIMUM FLUID TEMP. °F
AC Construction (Alternating Current)	F	NONE	77	175
DC Construction (Direct Current)	A,F or H	None,FT or HT	77	150

Positioning

This valve is designed to perform properly when mounted in any position. However, for optimum life and performance, the solenoid should be mounted vertically and upright to reduce the possibility of foreign matter accumulating in the solenoid base sub-assembly area.

Mounting

For mounting bracket (optional feature) mounting dimensions, refer to Figure 1.

Piping

Connect piping to valve according to markings on valve body. Apply pipe compound sparingly to male pipe threads only. If applied to valve threads, the compound may enter the valve and cause operational difficulty. Avoid pipe strain by properly supporting and aligning piping. When tightening the pipe, do not use valve or solenoid as a lever. Locate wrenches applied to valve body or piping as close as possible to connection point.

IMPORTANT: To protect the solenoid valve, install a strainer or filter, suitable for the service involved, in the inlet side as close to the valve as possible. Clean periodically depending on service conditions. See ASCO Bulletins 8600, 8601, and 8602 for strainers.

Wiring

Wiring must comply with local codes and the National Electrical Code. The solenoid housing has a 7/8" diameter hole to accommodate 1/2" conduit. On some constructions, a green grounding wire is provided. To facilitate wiring, the solenoid enclosure may be rotated 360° by removing the retaining cap or clip. **WARNING: When metal retaining clip disengages, it will spring upward.** Rotate enclosure to desired position. Then replace retaining cap or clip before operating.

Solenoid Temperature

Standard catalog valves are supplied with coils designed for continuous duty service. When the solenoid is energized for a long period, the solenoid enclosure becomes hot and can be touched by hand only for an instant. This is a safe operating temperature. Any excessive heating will be indicated by the smoke and odor of burning coil insulation.

MAINTENANCE

NOTE: It is not necessary to remove the valve from the pipeline for repairs.

WARNING: Turn off electrical power supply and depressurize valve before making repairs.

Cleaning

All solenoid valves should be cleaned periodically. The time between cleanings will vary depending on the medium and service conditions. In general, if the current to the coil is correct, sluggish valve operation, excessive noise or leakage will indicate that cleaning is required. Clean valve strainer or filter when cleaning the valve.

Preventive Maintenance

1. Keep the medium flowing through the valve as free from dirt and foreign material as possible.
2. While in service, the valve should be operated at least once a month to insure proper opening and closing.
3. Depending on the medium and service conditions, periodic inspection of internal valve parts for damage or excessive wear is recommended. Thoroughly clean all parts. Replace worn or damaged parts . However, for best results, replace all parts as supplied with an ASCO Rebuild Kit.

Causes Of Improper Operation

1. **Faulty Control Circuit:** Check the electrical system by energizing the solenoid. A metallic "click" signifies that the solenoid is operating. Absence of the "click" indicates loss of power supply. Check for loose or blown fuses, open-circuited or grounded coil, broken lead wires or splice connections.
2. **Burned-Out Coil:** Check for open-circuited coil. Replace coil if necessary. Check supply voltage; it must be the same as specified on nameplate.
3. **Low Voltage:** Check voltage across the coil leads. Voltage must be at least 85% of nameplate rating.
4. **Incorrect Pressure:** Check valve pressure. Pressure to valve must be within range specified on nameplate.
5. **Excessive Leakage:** Disassemble valve (see MAINTENANCE) and clean all parts. Replace worn or damaged parts. However, for best results, replace all parts as supplied with an ASCO Rebuild Kit.

Printed in U.S.A.

Automatic Switch Co. 50-60 Hanover Road, Florham Park, New Jersey 07932

© Automatic Switch Co. All Rights Reserved.

Coil Replacement (Refer to Figure 2.)

WARNING: Turn off electrical power supply. Then proceed as follows:

1. Disconnect coil lead wires and green grounding wire if present.
2. Remove retaining cap or clip, nameplate, and housing.

   WARNING: When metal retaining clip disengages, it will spring upward.
3. Remove spring washer, insulating washer, grounding wire terminal (if present), and coil from solenoid base sub- assembly. Insulating washers are omitted when a molded coil is used.
4. Reassemble in reverse order of disassembly. Use exploded view provided for identification and placement of parts.

CAUTION: The solenoid must be fully reassembled because the housing and internal parts complete the magnetic circuit. Place an insulating washer at each end of non-molded coil.

Valve Disassembly and Reassembly

NOTE: For valves with a manual operator (Suffix MO in catalog number) refer to Figure 3. For standard valves refer to Figure 2.

WARNING: Depressurize valve and turn off electrical power supply. Proceed in the following manner:

1. Remove retaining cap or clip and pull the entire solenoid enclosure off the solenoid base sub-assembly. **CAUTION: When metal retaining clip disengages, it will spring upward.**
2. Unscrew the solenoid base sub-assembly and remove bonnet gasket. For valves with a manual operator, unscrew manual operator body and remove stem retainer, manual operator stem sub-assembly, stem gasket, and bonnet gasket.
3. Remove bonnet screws (4), valve bonnet, core spring, core/diaphragm sub-assembly, and body gasket. **CAUTION: Do not damage or distort hanger spring between core/diaphragm sub-assembly.**
4. All parts are now accessible for cleaning or replacement. Replace worn or damaged parts. However, for best results, replace all parts as supplied with an ASCO Rebuild Kit.
5. Reassemble in reverse order of disassembly. Use exploded view provided for identification and placement of parts.
6. Replace body gasket and core/diaphragm sub-assembly, locating the bleed hole in the diaphragm assembly approximately 45° from the valve outlet.
7. Replace valve bonnet and bonnet screws (4). Torque bonnet screws (4) in a crisscross manner to 95 ± 10 inch-pounds (10,7 ± 1,1 newton-meters).
8. Insert core spring in core, wide end of core spring in core first, closed end protruding from top of core.
9. Replace bonnet gasket and solenoid base sub-assembly. Torque solenoid base sub-assembly to 175 ± 25 inch-pounds (19,8 ± 2,8 newton-meters).
10. For valves with a manual operator, replace stem gasket and manual operator stem sub-assembly in manual operator body.
11. Replace stem retainer on manual operator body. Be sure that the captive washer on manual operator stem sub-assembly is on the outside of the stem retainer when assembled.
12. Replace bonnet gasket, manual operator body, bonnet gasket, and solenoid base sub-assembly. Torque manual operator body and solenoid base sub-assembly to 175 ± 25 inch-pounds (19,8 ± 2,8 newton-meters).
13. Replace solenoid enclosure and retaining cap or clip.
14. Restore electrical power and line pressure.
15. After maintenance, operate the valve a few times to be sure of proper opening and closing.

ASCO REBUILD KITS

Rebuild Kits and Coils are available for ASCO valves. Parts marked with an asterisk (*) are supplied in Rebuild Kits.

ORDERING INFORMATION FOR ASCO REBUILD KITS

When Ordering Rebuild Kits or Coils, Specify Valve Catalog Number, Serial Number, Voltage, and Frequency.

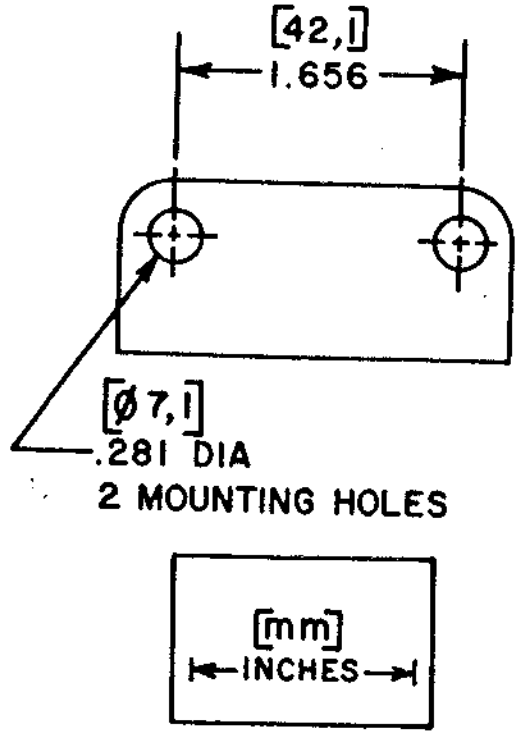

Figure 1.
Dimensions for Mounting Bracket (Optional Feature)

© Automatic Switch Co. MCMLXXXI. All Rights Reserved.

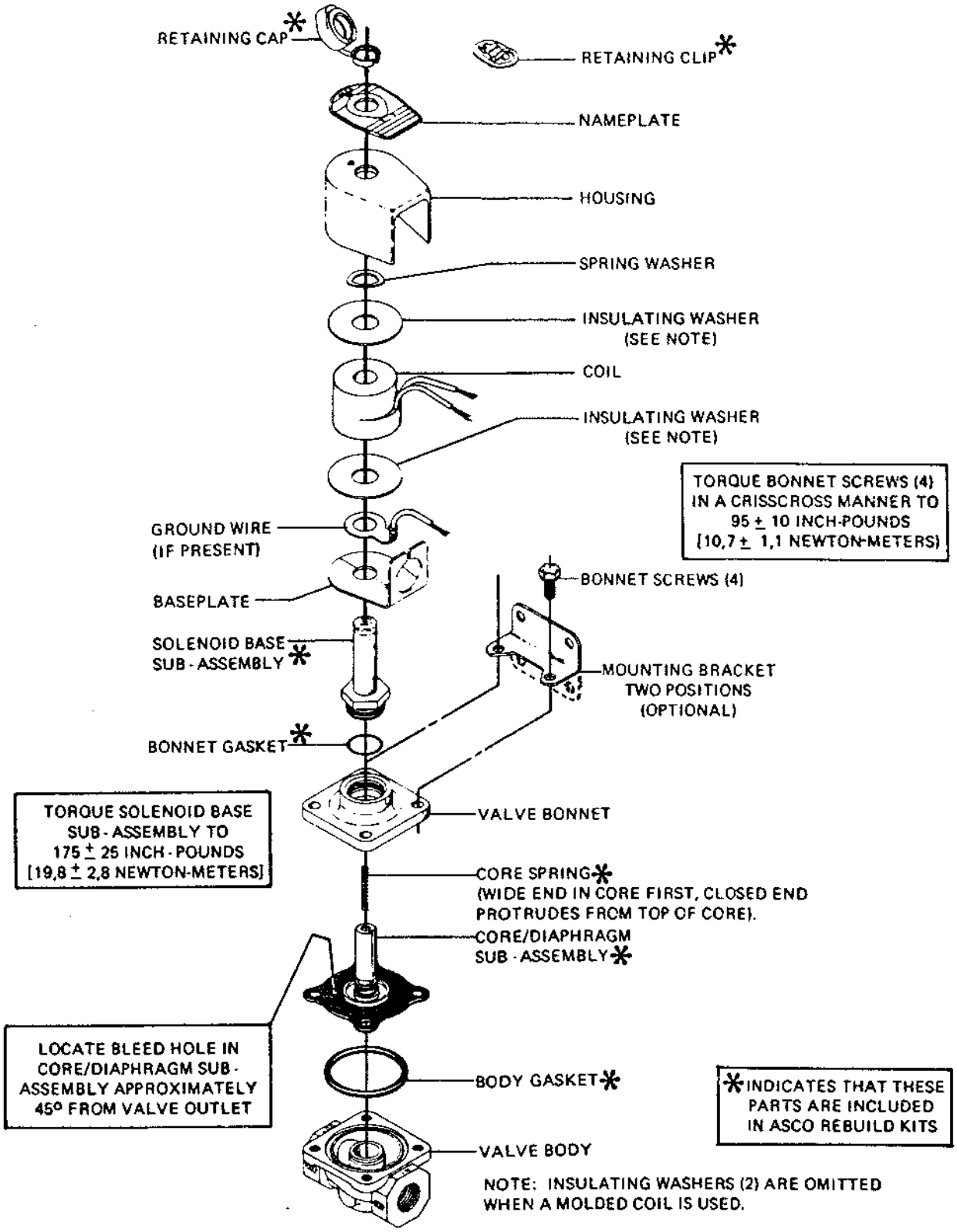

Figure 2. Bulletin 8210 - 1/2" and 3/4" NPT
General purpose solenoid enclosure shown.
For watertight and explosion-proof solenoid enclosure used on Bulletin 8211, see Form No.V5380.

© Automatic Switch Co. MCMLXXIV. All Rights Reserved.

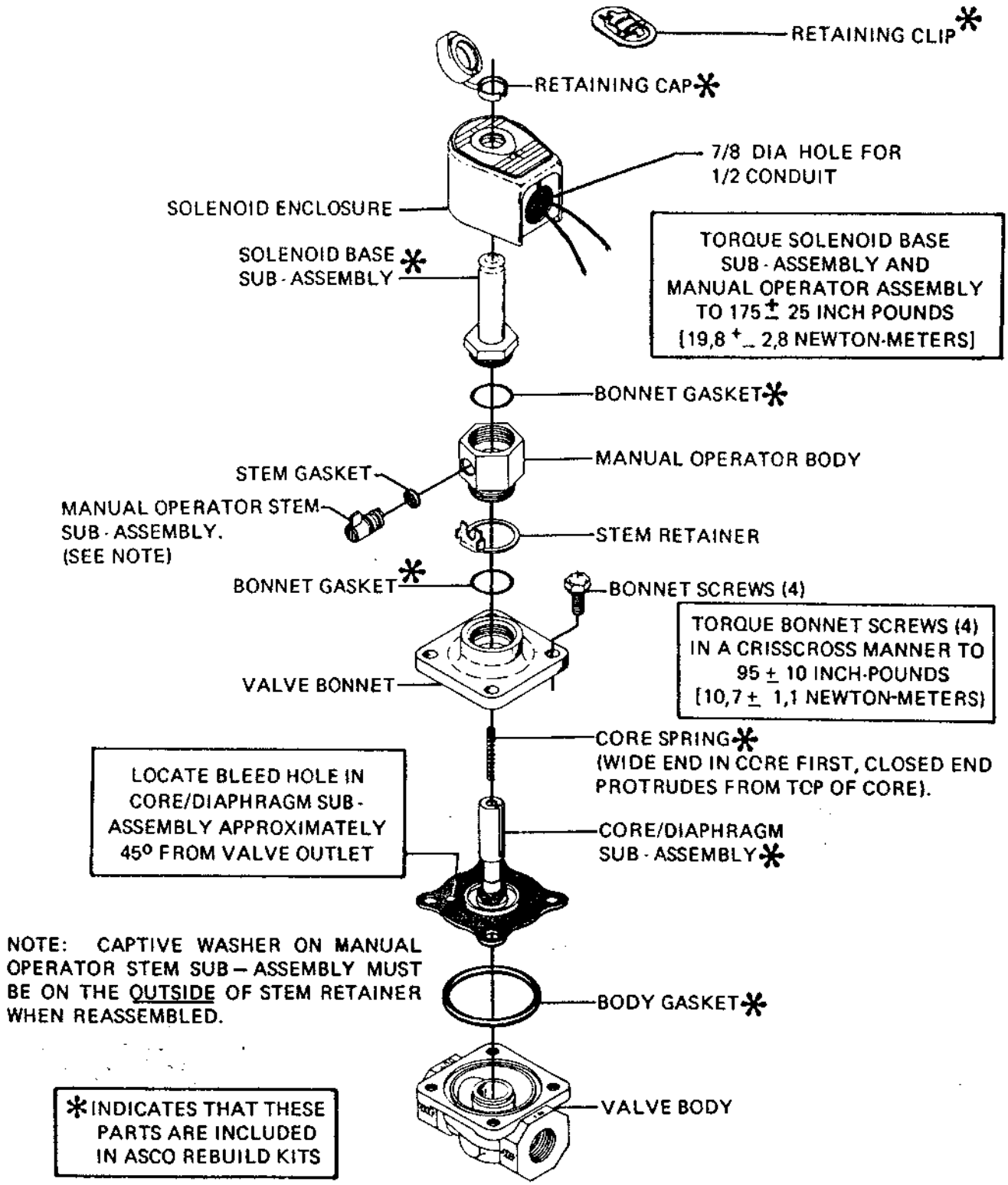

Figure 3. Bulletin 8210 - Manual Operator (Catalog No. with Suffix MO) General purpose solenoid enclosure shown. For watertight and explosion-proof solenoid enclosure used on Bulletin 8211, see Form No.V5380.

© Automatic Switch Co. MCMLXXIII. All Rights Reserved.

DESCRIPTION

MODEL 126 EJECTOR
The Model 126 ejector is a simple tee fitting with a fixed orifice in its inlet port. It provides the proper supply pressure to the main valve diaphragm chamber, allowing various two-way control pilots to control the valve position.

MODEL 126 EJECTOR DIAGRAM

Brass Construction / Stainless Steel Construction

MATERIAL	PART NUMBER	P (NPT)	T-TUBE O.D.	STD. ORIFICE	USED ON VALVE SIZES
Brass	213100	3/8"	3/8"	.125"	1 ¼"-6"
Brass	214100	1/2"	1/2"	.188"	8"-10"
Brass	215100	3/4"	3/4"	.188"	12"-16"
316 Stn. Steel	213700	1/4"	3/8"	.090"	1 ¼"-6"
316 Stn. Steel	214700	3/8"	1/2"	.125"	8"-10"
316 Stn. Steel	215700	1/2"	3/4"	.188"	12"-16"

Orifice bushings are stainless steel.

STAINLESS

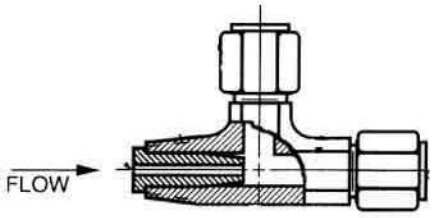

BRASS

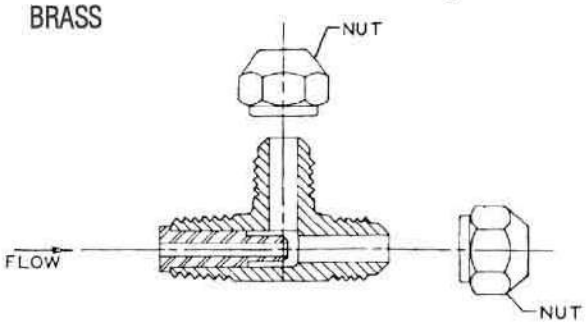

SCHEMATIC SYMBOL

The Model 126 Ejector is shown on OCV Valve Schematics as:

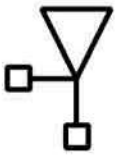

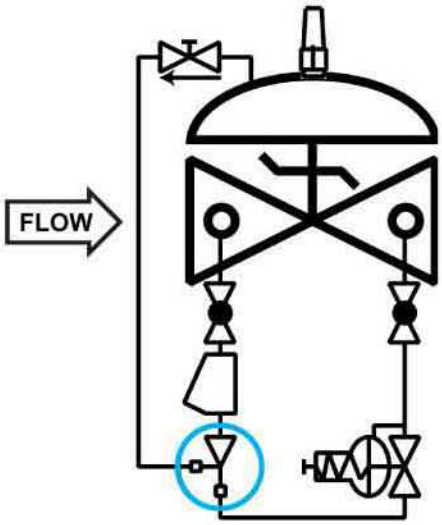

EXAMPLE: Shown here on a MODEL 127-3 Pressure Reducing Valve

TOLL FREE 1.888.628.8258 • **phone:** (918)627.1942 • **fax:** (918)622.8916 • 7400 East 42nd Place, Tulsa, OK 74145
email: sales@controlvalves.com • **website:** www.controlvalves.com

DESCRIPTION

The Model 141-2 Needle Valve is an adjustable restriction device installed in the control circuit tubing. The setting of the needle valve meters the flow into and out of the main valve diaphragm chamber, thus controlling the response speed of the main valve. Depending on the application, the needle valve may be used as a closing speed control, opening speed control, or both simultaneously.

◀**Needle Valves shown**
Sizes: 3/4" & 1/4"

MODEL 141-2 MATRIX

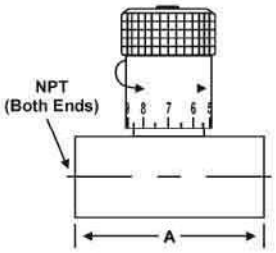

MATERIAL	PART NUMBER	INLET/OUTLET (NPT)	A	USED ON VALVE SIZE*
Brass	683100	1/4	2	1 ¼"-2"
Brass	683101	3/8	2 1/4	2 ½"-6"
Brass	683102	1/2	2 5/8	8"-10"
Brass	683103	3/4	3 1/4	12"-16"
Stn. Steel	683700	1/4	2	1 ¼"-2"
Stn. Steel	683702	3/8	2 1/4	2 ½"-6"
Stn. Steel	682704	1/2	2 5/8	8"-10"
Stn. Steel	683703	3/4	3 5/8	12"-16"

Note: Needle valve size may vary on valve application. Consult factory.

SCHEMATIC SYMBOL

The Model 141-2 Needle Valve is shown on OCV Valve Schematics as:

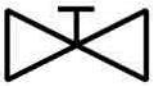

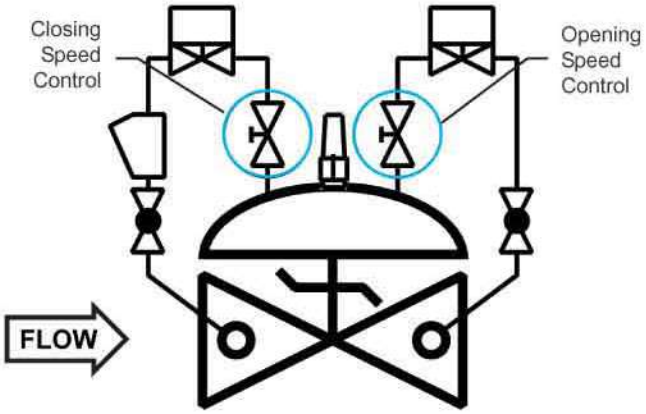

EXAMPLE: Shown here on a MODEL 115-3 DIGITAL VALVE as separate opening and closing speed controls.

TOLL FREE 1.888.628.8258 • **phone:** (918)627.1942 • **fax:** (918)622.8916 • 7400 East 42nd Place, Tulsa, OK 74145
email: sales@controlvalves.com • **website:** www.controlvalves.com

DESCRIPTION

MODEL 159 Y-STRAINER
The 159 Y-Strainer installs in the inlet piping of the pilot system and protects the pilot system from solid contaminants in the line fluid. It is the standard strainer for water service valves.

MODEL 159 Y-STRAINER MATRIX

MATERIAL	PART NUMBER	INLET/OUTLET (NPT)	BLOW OFF PORT (NP)	A	STD. MESH	USED ON VALVE SIZE
Bronze	660100	3/8	3/8	2 11/16	24	1 ¼"-6"
Bronze	660101	1/2	3/8	2 5/8	24	8"-10"
Bronze	660102	3/4	3/8	3 5/16	24	12"-16"
Stn. Steel	660700	3/8	1/4	2 1/2	20	1 ¼"-6"
Stn. Steel	660701	1/2	1/4	2 1/2	20	8"-10"
Stn. Steel	660702	3/4	1/4	3 1/8	20	12"-16"

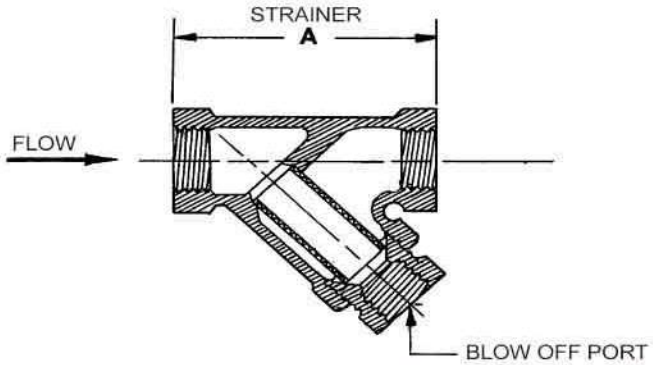

MATERIALS

Bronze, ASTM B62
Optional mesh sizes: 50,100

Stainless Steel, CF8-M (316)
Optional mesh sizes: 60, 80, 100

Screens are stainless steel

SCHEMATIC SYMBOL

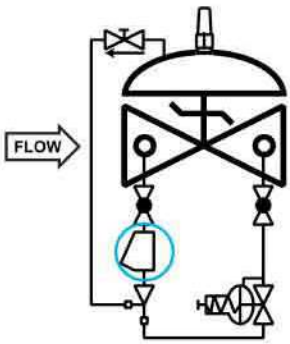

The Model 159 Y-Strainer is shown on OCV Valve Schematics as:

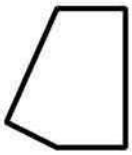

EXAMPLE: Shown here on a MODEL 127-3 Pressure Reducing Valve

MAINTENANCE

Routine cleaning and checking of the Y-Strainer will aid in keeping the control valve functioning properly. Pilot system isolation ball valves are supplied on valves equipped with the Model 159 Y-Strainer. These allow flushing of the screen through the blow off port, or removal of the screen itself for manual cleaning.

TOLL FREE 1.888.628.8258 • **phone:** (918)627.1942 • **fax:** (918)622.8916 • 7400 East 42nd Place, Tulsa, OK 74145
email: sales@controlvalves.com • **website:** www.controlvalves.com

DESCRIPTION

The Model 141-4 Ball Valve is a ¼-turn shutoff device used for isolating the pilot system from the main valve. They are extremely useful for performing routine maintenance and troubleshooting.

Ball valves are standard on water service valves; optional on fuel service valves.

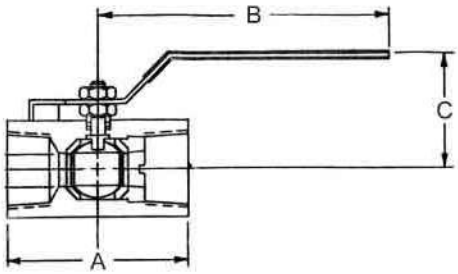

MODEL 141-4 MATRIX

MATERIAL	PART NUMBER	INLET/OUTLET (NPT)	A	B	C	USED ON VALVE SIZE*
Bronze	680100	3/8	1 3/4	3 1/2	1 7/8	1 ¼"-6"
Bronze	680101	1/2	2	3 1/2	2 1/4	8"-10"
Bronze	680102	3/4	3	4 3/4	2 1/4	12"-16"
Stn. Steel	680700	3/8	2	3 3/4	2 1/8	1 ¼"-6"
Stn. Steel	680701	1/2	2 1/4	3 3/4	2 1/2	8"-10"
Stn. Steel	680702	3/4	3	4 3/4	2 1/4	12"-16"

SCHEMATIC SYMBOL

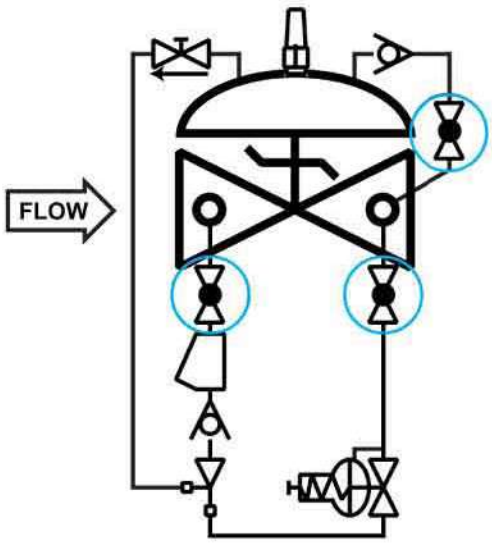

The Model 141-4 Ball Valve is shown on OCV Valve Schematics as:

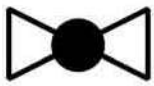

EXAMPLE: Shown here on a MODEL 127-4 Pressure Reducing / Check Valve.

TOLL FREE 1.888.628.8258 • **phone:** (918)627.1942 • **fax:** (918)622.8916 • 7400 East 42nd Place, Tulsa, OK 74145
email: sales@controlvalves.com • **website:** www.controlvalves.com