installation, operating, and maintenance instructions

modulating float control valve

model 8105

GENERAL DESCRIPTION

The OCV Model 8105 is a pilot-controlled, diaphragm-actuated globe valve designed to maintain a constant liquid level in a storage tank by compensating for variations in supply or demand. It can also be used as a high-level shutoff valve where it is permissible or desirable for the valve to slowly throttle toward the closed position during the last few inches of level change.

The 8105 consists of a Series 65 main valve, a Model 1356 differential control pilot, and a Model 813 remote float pilot. The latter is designed for those installations where it is necessary or desirable to have an adjustable float and an air gap between pilot and float. Auxiliary controls are provided to adjust valve response speed, degree of opening and control range midpoint.

INSTALLATION

General installation of the 8105 is shown in the schematic diagram. To insure proper operation of the valve, the following points should be observed.

1. The main valve should be installed in the line per the schematic diagram, with the flow arrow pointing **toward** the tank. As a further check, petroleum service valves are typically assembled in the "fail closed" configuration (flow **over** the seat). Water service valves, on the other hand, are typically assembled in the "fail open" configuration (flow **under** the seat).
2. The float pilot is installed inside the tank as shown on the schematic diagram. The float is then adjusted to the appropriate level by means of the stop collars on the float rod.
3. Minimum recommended line size for the connection between the main valve and the float pilot is as follows:
   (a) 1/4" pipe or 3/8" tubing for runs up to 20 feet.
   (b) 3/8" pipe or 1/2" tubing for runs over 20 feet.

See the Basic Valve section of this manual for other installation details.

THEORY OF OPERATION

Operation of the 8105 can be readily seen by referring to the schematic diagram. At the heart of the system is the differential control pilot (3). This is a normally-closed pilot, with its degree of opening determined by the balance of forces acting across its diaphragm. Full inlet pressure is applied under the diaphragm; force on top of the diaphragm is a combination of inlet pressure applied through needle valve (5B), plus spring loading, minus the pressure relieved through the float pilot (2).

As the float falls below its median position, the float pilot (2) relieves more pressure from the upper chamber of the differential pilot (3), causing the pilot to open wider. This increases flow through the ejector (4), which , in turn, decreases pressure on the bonnet of the main valve (1).

OCV Control Valves
7400 East 42nd Place / Tulsa, Oklahoma 74145 -4744 USA / (918) 627 1942 / 888-OCV-VALV / FAX 918-622-8916
e-mail: sales@controlvalves.com / website: www/controlvalves.com

The main valve thus opens further to admit a greater flow into the tank.

Conversely, as the float rises above its median position, the float pilot (2) relieves less pressure from the upper chamber of the differential pilot (3), causing the pilot to move toward its closed position. This decreases flow through the ejector (4), which, in turn, increases pressure on the bonnet of the main valve (1). The main flow thus closes further to admit less flow to the tank. If the float should approach its extreme of upward travel, the differential pilot will go fully closed, which will, in turn, cause the main valve to go fully closed.

CONTROLS ADJUSTMENT

All controls on the 8105 are preset at the factory. These settings should provide satisfactory operation in most applications. If adjustments should prove necessary, the following guidelines apply:

1. Needle valve 5B provides a fine adjustment of the tank level to be maintained. Turning the adjustment screw clockwise raises the median level; turning it counterclockwise lowers the median level.

NOTE: Under normal circumstances, this control should never be placed in its full open (counterclockwise) or full closed (clockwise) position. If open too far, the main valve may never open. If closed too far, the main valve may not close properly. A good average position for this control is approximately 2-3 turns from full open.

2. Differential pilot (3) controls the maximum degree of opening, hence the maximum flow rate, of the main valve. Turning the adjusting screw clockwise will decrease the amount the valve opens for a given amount of float travel; turning the adjusting screw counterclockwise will increase the amount of opening. Again, extremes of the adjustment range should be avoided. If the adjusting screw is too far counterclockwise, the main valve may not close properly.
3. Needle valve 5A controls the opening and closing speed of the main valve. Turning the adjustment screw clockwise decreases the rate at which the valve opens and closes; turning the adjustment screw counterclockwise increases the rate. For maximum response speed, it is permissible to set this control to its full open (counterclockwise) position. However, the control should never be set to its full closed (clockwise) position, lest all valve response be lost.

MAINTENANCE

Visual inspection at periodic intervals is required to determine the general physical condition of the equipment. This inspection should be conducted at not more than 30 day intervals. The following is a list of "check points" to assist maintenance personnel in this inspection task.

1. Check for chipped or peeling paint.
2. Check that all tube fittings on valve body and pilots are secure.
3. Check for damaged tubing.
4. Check for leaks at fittings, and around bonnet and flanges.
5. Check for loose bolts on bonnet and flanges.
6. Remove and clean strainer screen.

TROUBLESHOOTING

The following outline provides troubleshooting data for the Model 8105. The information presented will enable maintenance personnel to isolate a specific malfunction and provide reference to the appropriate section of this manual for detailed maintenance information. NOTE: Prior to troubleshooting the 8105, a thorough check should be made to determine the operational status of all interfacing systems.

1. MAIN VALVE FAILS TO OPEN
   (a) One or both stops cocks closed—Open as required.
   (b) Clogged strainer screen—Remove screen and clean.
   (c) Incorrect setting on differential pilot or needle valve 5B—Refer to "Controls adjustment: section.
   (d) Needle valve 5A clogged—Remove needle valve and clear obstruction.
   (e) Restricted pilot stem—Refer to "1356 Pilot" section.
   (f) Pilot diaphragm ruptured—Refer to "1356 Pilot" section.

(g) Clogged pilot tubing—Remove tubing and clear with air hose.

(h) Clogged float pilot—Refer to "813 Pilot" section.

(i) Restricted main valve stem—Refer to "Basic Valve" section.

(j) Main valve diaphragm ruptured (petroleum service only)—Refer to "Basic Valve" section.

2. MAIN VALVE FAILS TO CLOSE

(a) Close the downstream stop cock. If valve then closes, a malfunction in the differential pilot or float pilot is indicated—Refer to appropriate pilot section.

(b) If closing the stop cock has no effect, one of the below problems is indicated:

1. Clog in tubing to main valve bonnet, needle valve 5A, ejector, strainer, or any combination of the above—Remove suspected parts and clear with air hose.

2. Ruptured main valve diaphragm (water service only)—Refer to "Basic Valve" section.

(c) Incorrect setting on needle valve 5A, needle valve 5B or differential pilot—Refer to "Controls Adjustment" section.

3. MAIN VALVE OPENS AND CLOSES BUT MODULATION IS POOR

(a) Differential pilot or needle valve 5B improperly set—Refer to "Controls Adjustment" section.

(b) Restricted stem in differential pilot—Refer to "1356 Pilot" section.

(c) Restricted stem in main valve—Refer to "Basic Valve" section.

MODEL 8105

MODULATING LEVEL CONTROL VALVE

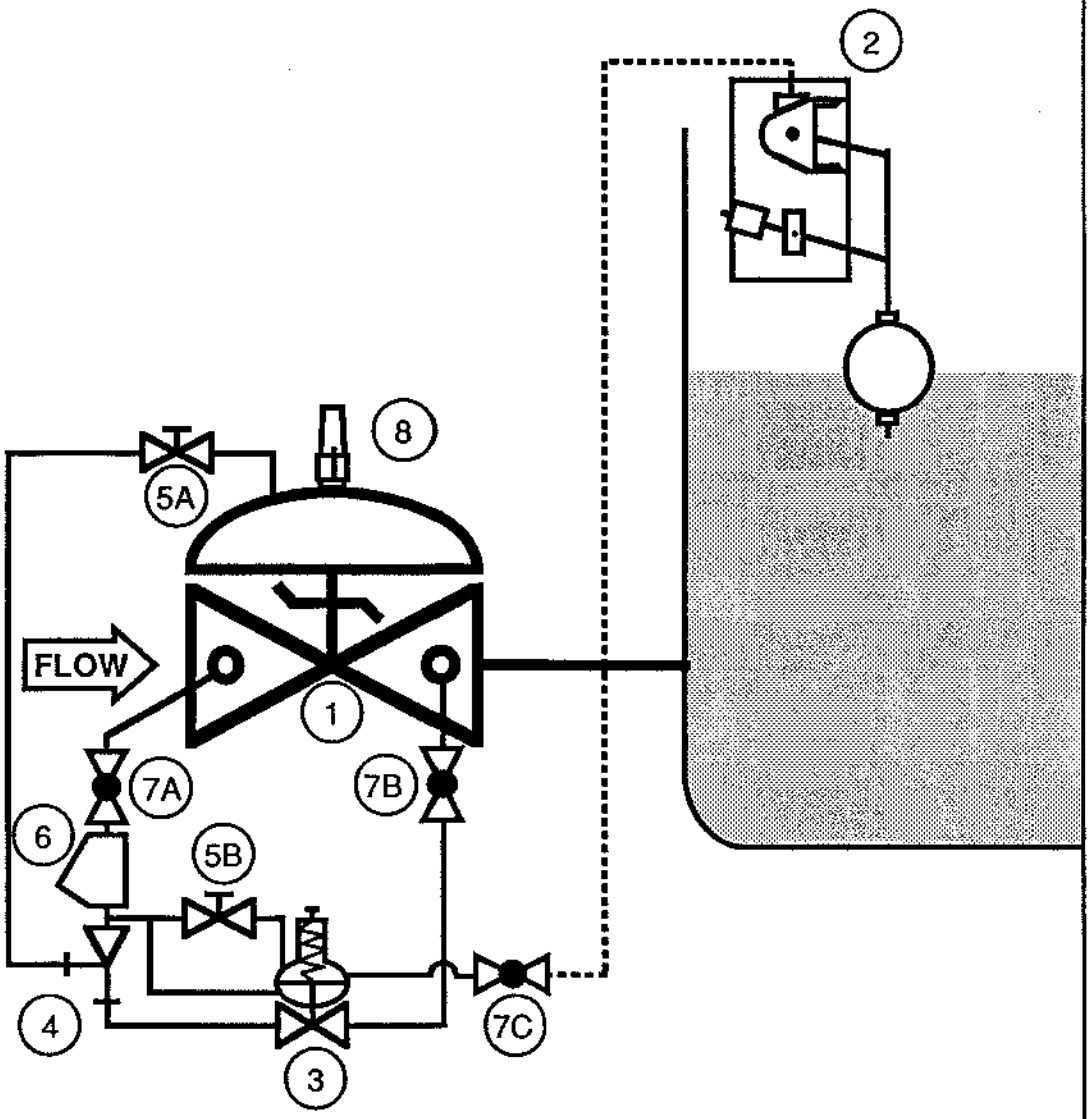

------- INDICATES FIELD-CONNECTED LINES

ITEM	PART NO.	QTY	DESCRIPTION
1	65	1	BASIC VALVE ASSEMBLY
2	813	1	TWO-WAY FLOAT PILOT
3	1356	1	DIFFERENTIAL CONTROL PILOT
4	126	1	EJECTOR
5	141-2	2	NEEDLE VALVE
6	159	1	Y-STRAINER
7	141-4	3	ISOLATION BALL VALVE
8	155	1	VISUAL INDICATOR (OPTIONAL)

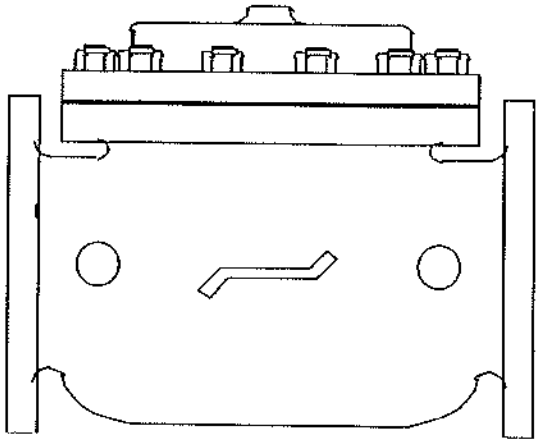

installation, operating, and maintenance instructions

series 65

basic control valve

GENERAL DESCRIPTION

The OCV Series 65 is a hydraulically-operated, diaphragm-actuated valve. It is available in either a globe (Model 65) or angle (Model 65A) configuration. The diaphragm is nylon-fabric bonded with synthetic rubber and forms a sealed chamber in the upper portion of the valve, separating operating pressure from line pressure. An elastomeric seat disc forms a tight seal with the valve seat when pressure is applied above the diaphragm.

FUNCTIONAL DESCRIPTION

Because the Series 65 is a hydraulically operated valve, it requires a minimum line pressure of approximately 5 psig in order to function. The valve functions on a simple principle of pressure differential. The line pressure at the inlet of the valve is bypassed through the pilot control piping to the diaphragm chamber of the valve. This pressure, together with the valve spring, works against the pressure under the valve seat. Because the effective area of the diaphragm is greater than that of the seat, the valve is held tightly closed. As the controlling pilot(s) allow the pressure to bleed off the diaphragm chamber, the two opposing pressures begin to balance and the valve will begin to open. The valve can be used to perform a simple on-off function, or with the proper pilot system, a modulating, or regulating function.

In cases where the line fluid is unusually dirty, or is otherwise unsuitable for operating the valve, an independent operating pressure source may be employed. The pressure available from such a source must be equal to, or greater than, line pressure.

INSTALLATION

In order to insure safe, accurate and efficient operation of the OCV control valve, the following list of checkpoints and procedures should be followed when installing the valve.

1. Make a careful visual inspection of the valve to insure that there has been no damage to the external piping, fittings or controls. Check that all fittings are tight.
2. Thoroughly flush all interconnecting piping of chips, scale and foreign matter prior to mounting the valve.
3. Install the valve in the line according to the flow arrow on the inlet flange. The arrow should point downstream.
4. Allow sufficient room around the valve for case of adjustment and maintenance service.

In addition, it is highly recommended that:

1. Isolation valves (eg., gate or butterfly) be installed on the inlet and discharge sides of the valve to facilitate isolating the valve for maintenance.
2. Pressure gauges be installed at the inlet and outlet sides of the valve to provide monitoring of the valve during initial start-up and during operation. The body side ports, if unused by the pilot system, provide a convenient connection for the gauges.
3. All valves larger than 6" be installed horizontally, i.e., with the bonnet pointed up, for ease of adjustment and maintenance servicing.

MAINTENANCE

The OCV control valve requires no lubrication and a minimum of maintenance. However, a periodic inspection should be established to determine how the fluid being handled is affecting the efficiency of the valve. In a water system, for example, the fluid velocity as well as the substances occurring in natural waters, such as dissolved minerals and suspended particles, vary in every installation. The effect of these actions or substances must be determined by inspection. It is recommended that an annual inspection, which includes ex-

OCV Control Valves
7400 East 42nd Place / Tulsa, Oklahoma 74145 -4744 USA / (918) 627-1942 / 888-OCV-VALV / FAX 918-622-8916
e-mail: sales@controlvalves.com / website: www/controlvalves.com

amination of the valve interior, be conducted. Particular attention should be paid to the elastomeric parts, i.e., the diaphragm and seat disc. Any obviously worn parts should be replaced.

REPAIR PROCEDURES

In the event of malfunction of the OCV control valve, troubleshooting should be conducted according to the procedures outlined for the specific model of valve. Then, if those steps indicate a problem with the main valve, this section will outline the procedures necessary to correct the problem.

Problems with the main valve can be classed in three basic categories:

1. VALVE FAILS TO OPEN
   a. Diaphragm damaged* - See Procedure A
   b. Stem binding - See Procedure B
2. VALVE FAILS TO CLOSE
   a. Diaphragm damaged* - See Procedure A
   b. Stem binding - See Procedure B
   c. Object lodged in valve - See Procedure B
3. VALVE OPENS AND CLOSES BUT LEAKS WHEN CLOSED
   a. Seat disc damaged - See Procedure C
   b. Seat ring damaged - See Procedure D

   **A diaphragm failure can prevent the valve from either opening or closing, depending on the flow direction. Most water service valves flow "under the seat", in which case a diaphragm failure will keep the valve from closing. On the other hand, most fuel service valves flow "over the seat", in which case a diaphragm failure will keep the valve from opening. To determine which you have, examine the bridge mark cast into the side of the valve body, then compare it with the figures below.*

PROCEDURE A : DIAPHRAGM REPLACEMENT

1. Isolate the valve from the system by closing upstream amd downstream block valves.
2. Loosen one of the tubing connections on the bonnet. Allow any residual pressure to bleed off.
3. Remove all tubing connected at the bonnet.
4. Remove the bonnet nuts.
5. Remove the bonnet. If the bonnet sticks in place, it may be loosened by rapping sharply around its edge with a *rubber-headed* mallet. *NOTE: 8" and larger valves are equipped with eye bolts through which a chain can be fastened to aid in lifting the bonnet.*
6. Remove the spring.
7. Remove the diaphragm plate capscrews and the diaphragm plate.
8. Remove the old diaphragm.
9. Making sure the dowel pin holes are in the proper location, place the new diaphragm over the studs and press down until it is flat against the body and spool.
10. Replace the diaphragm plate and the diaphragm plate capscrews.
11. Tighten all diaphragm plate capscrews snugly.
12. Replace the spring.
13. Replace the bonnet and reinstall the bonnet nuts.
14. Tighten the bonnet nuts snugly using a criss-cross tightening pattern.
15. Reinstall the control tubing.
16. Reopen the upstream and downstream block valves.
17. Before placing the valve back in service, perform the air bleed procedure described in the first section of this manual.

PROCEDURE B: CORRECTION OF BINDING STEM

1. Perform Steps 1 thru 6 of Procedure A, above.
2. Remove the spool assembly from the valve. *NOTE:*

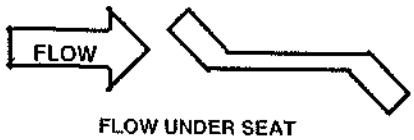

FLOW UNDER SEAT
DIAPHRAGM FAILURE = VALVE FAILS TO CLOSE

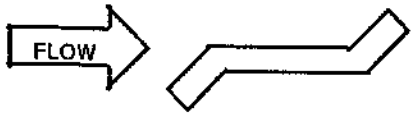

FLOW OVER SEAT
DIAPHRAGM FAILURE = VALVE FAILS TO OPEN

On smaller valves, this can be accomplished simply by grasping the stem and pulling upward. Valves 6" and larger have the top of the stem threaded to accept an eyebolt to aid in lifting the spool out of the body. 6" thru 12" valves are threaded 3/8-16. 14" and 16" valves are threaded 5/8-11.

3. Carefully examine both ends of the stem for deep scratches, scoring or buildup of mineral deposits.

Polish the stem if necessary using a fine grade of emery cloth.

4. Similarly, examine and polish the upper bushing (in the bonnet) and the lower guide (in the seat ring).
5. Reinstall the spool assembly.
6. Reassemble the valve, following Steps 12 thru 17 in Procedure A.

PROCEDURE C: SEAT DISC REPLACEMENT

1. Perform Steps 1 and 2 of Procedure B, above.
2. With the spool assembly removed from the body, remove the seat retainer screws.
3. Slide the seat retainer off the lower end of the stem.
4. Remove the seat disc from its groove in the spool. *NOTE: The seat disc may fit quite tightly in the groove. If necessary, it may be pried out using a thin-bladed screwdriver or similar tool.*
5. Install the new seat disc in the groove.
6. Reinstall the seat retainer and tighten the seat retainer screws.
7. Reassemble the valve, following Steps 5 and 6 of Procedure B.

PROCEDURE D: SEAT RING REPLACEMENT

NOTE: It is rare for a seat ring to require replacement. Minor nicks and scratches in the seating surface can usually be smoothed out with emery cloth.

1. Perform Steps 1 and 2 of Procedure B, above.
2. If you are working on a 4" or smaller valve, follow Steps 3 thru 9, below.
3. If you are working on a 6" or larger valve, follow Steps 10 thru 16, below.
4. Seat rings in valves 4" and smaller are threaded into the valve body. To remove, you will need a special seat ring tool. You may fabricate one using standard pipe as shown in the sketch below, or one may be purchased from OCV.
5. Using the seat ring tool, unthread the seat ring from the body.
6. Remove the old o-ring from the counterbore in the body.
7. Install the new o-ring in the counterbore.
8. Using the seat ring tool, install the new seat ring.
9. Reassemble the valve, following Steps 5 & 6 of Procedure B.
10. Seat rings in valves 6" and larger are bolted into the body with socket head capscrews. In addition you will note that the seat ring is equipped with additional threaded holes that may be used for "jacking" the seat ring out of the body.
11. Remove the socket head capscrews.
12. Remove the old seat ring from the body by temporarily installing two or more of the capscrews in the "jacking" holes.
13. Install a new o-ring in the groove of the new seat ring. Lubricate the o-ring and outer seat ring wall with Vaseline® or similar lubricant.
14. Install the new seat ring in the body, making sure that the capscrew holes line up.
15. Replace and tighten all the capscrews.
16. Reassemble the valve, following Steps 5 and 6 of Procedure B.

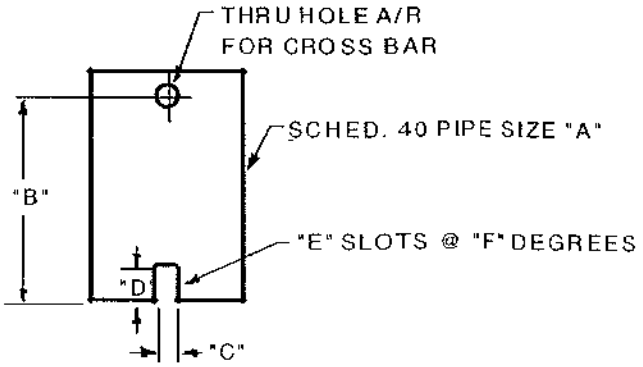

VALVE SIZE	"A" PIPE SIZE	"B" MIN. LENGTH	"C" SLOT WIDTH	"D" SLOT DEPTH	"E" NO. OF SLOTS	"F" SLOT SPACING
1-1/4"	3/4"	6"	3/8"	3/8"	2	180°
1-1/2"	3/4"	6"	3/8"	3/8"	2	180°
2"	1-1/2"	7"	3/8"	3/8"	2	180°
2-1/2"	2"	8"	1/2"	1/2"	3	120°
3"	2-1/2"	9"	5/8"	5/8"	2	180°
4"	3"	10"	5/8"	5/8"	2	180°

REVISED 3-17-97

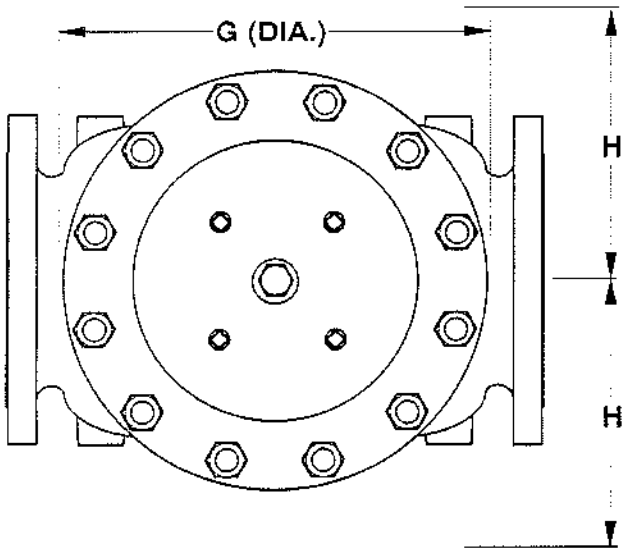

DIM	ANSI CLASS	VALVE SIZE 1 1/4	1 1/2	2	2 1/2	3	4	6	8	10	12	14	16	24
A	S.E	8.75	8.75	9.88	10.50	13.00	–	–	–	–	–	–	–	–
	150	8.50	8.50	9.38	10.50	12.00	15.00	17.75	25.38	29.75	34.00	39.00	40.38	62.00
	300	8.75	8.75	9.88	11.12	12.75	15.62	18.62	26.38	31.12	35.50	40.50	42.00	63.75
B	SE	1.44	1.44	1.69	1.88	2.25	–	–	–	–	–	–	–	–
	150	2.31	2.50	3.00	3.50	3.75	4.50	5.50	6.75	8.00	9.50	10.62	11.75	16.00
	300	2.62	3.06	3.25	3.75	4.12	5.00	6.25	7.50	8.75	10.25	11.50	12.75	18.00
C	SE	4.38	4.38	4.75	6.00	6.50	–	–	–	–	–	–	–	–
	150	4.25	4.25	4.75	6.00	6.00	7.50	10.00	12.69	14.88	17.00	–	20.81	–
	300	4 3/8	4.38	5.00	6.38	6.38	7.81	10.50	13.19	15.56	17.75	–	21.62	–
D	SE	3.12	3.12	3.88	4.00	4.50	–	–	–	–	–	–	–	–
	150	3.00	3.00	3.88	4.00	4.00	5.50	6.00	8.00	11.38	11.00	–	15.69	–
	300	3.25	3.25	4.12	4.38	4.38	5.81	6.50	8.50	12.06	11.75	–	16.50	–
E	ALL	6.00	6.00	6.00	7.00	6.50	7.92	10.00	11.88	15.38	17.00	18.00	19.00	27.00
F	ALL	3.88	3.88	3.88	3.88	3.88	3.88	3.88	6.38	6.38	6.38	6.38	6.38	8.00
G	ALL	6.00	6.00	6.75	7.69	8.75	11.75	14.00	21.00	24.50	28.00	31.25	34.50	52.00
H	ALL	10.00	10.00	11.00	11.00	11.00	12.00	13.00	14.00	17.00	18.00	20.00	20.00	28.50

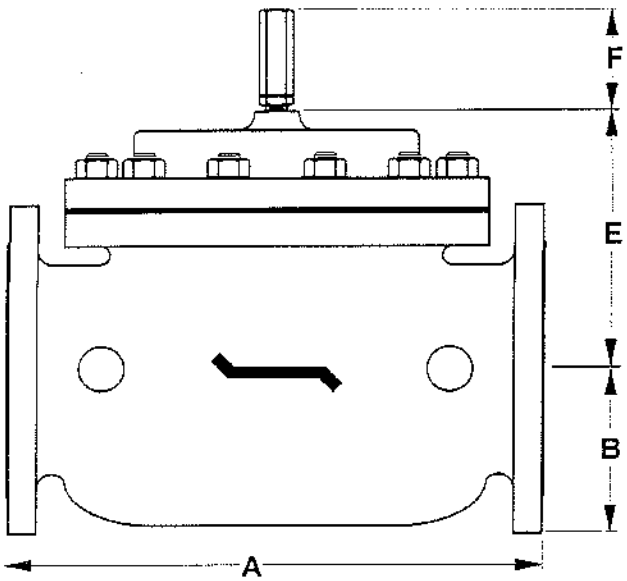

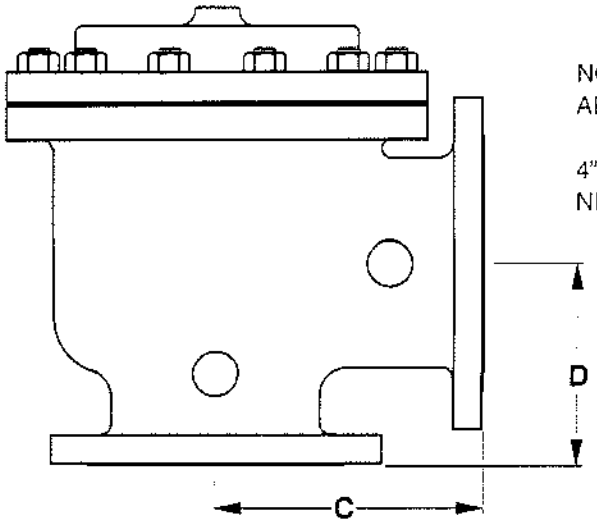

NOTE: 3" VALVE DIMENSIONS ARE FOR NEW MODEL 3100

4" VALVE DIMENSIONS ARE FOR NEW MODEL 4400

REV. A SDJ 6-6-02
REV. B SDJ 2-3-03

TOLERANCES	
UNLESS NOTED	
FRACTIONAL ±1/64	
DECIMAL ±.005	
MACH. FINISH 125√	
ANGULAR ±1/2°	
DRAWN BY SDJ	DATE 10-6-97
CHKD. BY	DATE

OCV Control Valves
TULSA, OKLAHOMA U.S.A.

GENERAL VALVE DIMENSIONS

SIZE	DRAWING NUMBER	REV.
A	65D	B

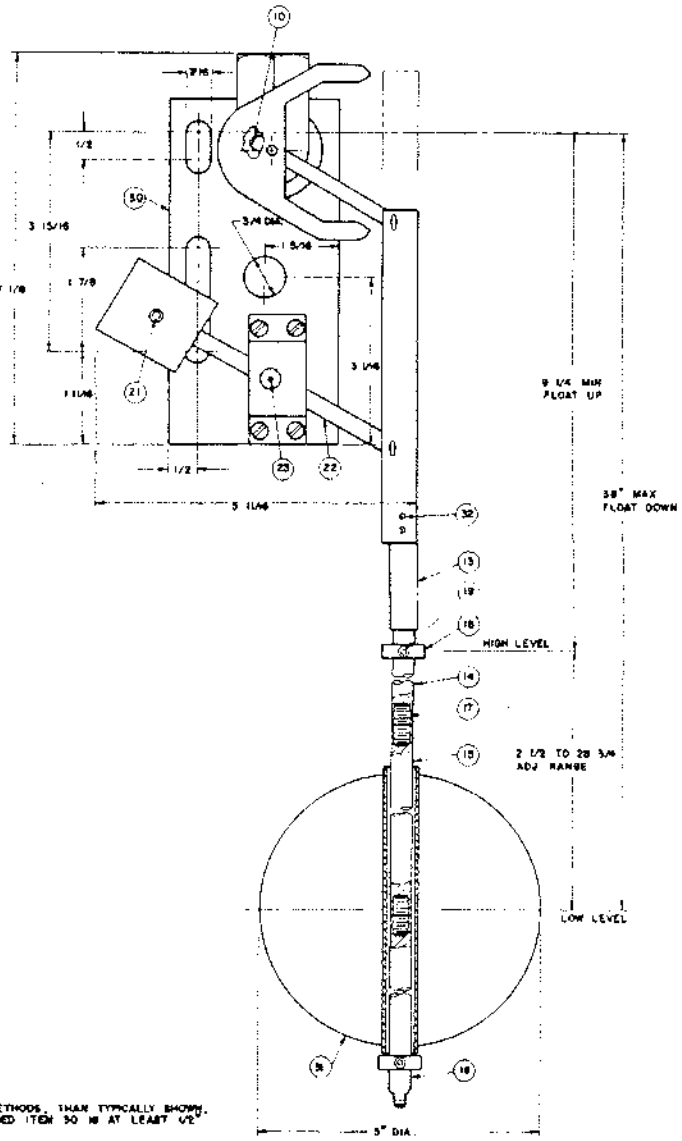

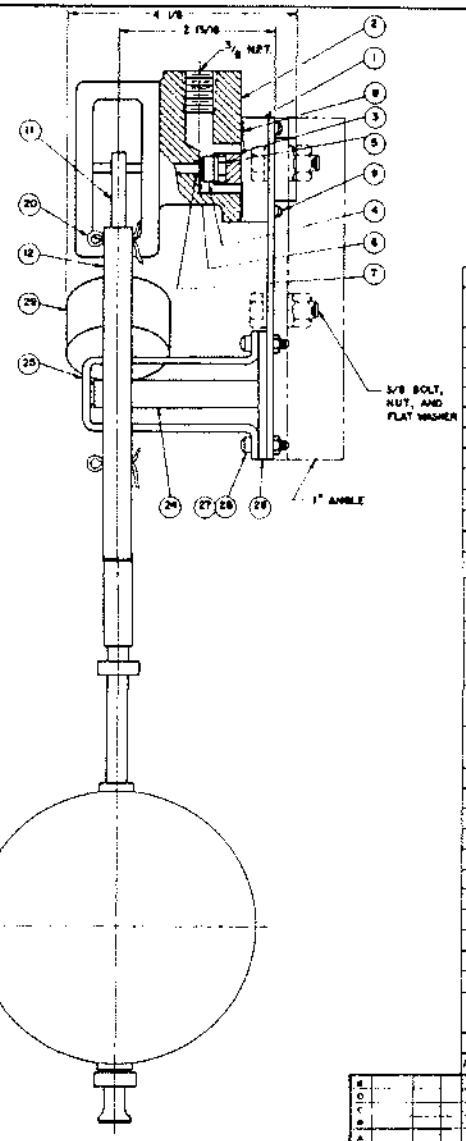

ITEM	OCV NO	QTY.	DESCRIPTION	MATERIAL
32	620702	2	PIN, SPRING	STN. STL.
31	520705	1	FLOAT	STN. STL.
30	300476	1	PLATE, MOUNTING	STEEL
29	300813	1	COUNTERWEIGHT	STN. STL.
28	590718	4	NUT, HX. HD.	STN. STL.
27	532701	4	SCREW, FIL. HD.	STN. STL.
26	300809	1	BASE, BRACKET	STN. STL.
25	300810	1	BRACKET, STEM	STN. STL.
24	314731	1	STEM, COUNTERWEIGHT PIVOT	STN. STL.
23	620707	1	PIN, SPRING	STN. STL.
22	300816	1	ARM, COUNTERWEIGHT	STN. STL.
21	550706	1	SCREW, SET	STN. STL.
20	620706	2	PIN, COTTER	STN. STL.
19	530714	2	SCREW, SET	STN. STL.
18	300788	2	COLLAR, STOP	STN. STL.
17	510407	2	STUD	STN. STL.
16	300738	1	ROD, FLOAT LOWER	STN. STL.
15	300789	1	ROD, FLOAT EXTENSION	STN. STL.
14	300730	1	ROD, FLOAT UPPER	STN. STL.
13	300811	1	CONNECTOR, FLOAT ROD	STN. STL.
12	300812	1	ARM, LINKAGE	STN. STL.
11	300808	1	ARM, ACTUATOR	STN. STL.
10	532703	1	SCREW, RD. HD.	STN. STL.
9	532709	6	SCREW, FIL. HD.	STN. STL.
8	695045	1	GASKET	BUNA-N
7	611008	1	O-RING	VITON
6	585719	2	WASHER, THRUST	STN. STL.
5	651711	1	SPRING	STN. STL.
4	300734	1	ARBOR	STN. STL.
3	510713	1	DISC	STN. STL.
2	304722	1	BONNET	STN. STL.
	304122	1	BONNET	BRONZE
1	302722	1	BODY	STN. STL.

1 OTHER MOUNTING METHODS, THAN TYPICALLY SHOWN, MAY BE USED PROVIDED ITEM 30 IS AT LEAST 1/2" FROM TANK WALL

NOTES ——

REVISIONS

MATERIAL

TOLERANCES UNLESS NOTED FRACTIONAL ± 1/64 DECIMAL ± .005 ANGULAR ± 1/2°

NO REPR

DRAWN BY RON DATE 10-9-90

CHECK BY DATE

SCALE FULL (APPROX)

OCV Control Valves

813 VERTICAL FLOAT PILOT

SIZE D

DRAWING NUMBER 813

REV E

differential control pilot

installation, operating, and maintenance instructions

model 1356

GENERAL DESCRIPTION

The Model 1356 Differential Control Pilot is a normally-closed, direct-acting, spring-loaded, diaphragm-type control pilot. It is designed primarily for use in systems using LPG or other high vapor pressure liquids to maintain valve inlet pressure a constant, preset amount higher than storage tank vapor pressure in order to prevent flashing in the system. It is manually adjustable by means of an adjustment screw located under the cap on top of the pilot. It is a constant throttling device, maintaining precise positive control of the Main Valve.

FUNCTIONAL DESCRIPTION

Basically, the Model 1356 controls the amount of pressure in the upper chamber of the main valve, hence, the degree of opening or closing of the main valve. The main valve inlet pressure is sensed under the pilot diaphragm and balances against both tank vapor pressure and spring loading above the diaphragm. As valve inlet pressure increases (or vapor pressure decreases), the pilot opens wider, decreasing the pressure in the upper chamber of the main valve and allowing it to open a proportionate amount in order to maintain a constant differential. As valve inlet pressure decreases (or vapor pressure increases), the pilot begins to close, increasing the pressure in upper chamber of the main valve and allowing it to close. This is a constant modulating action compensating for any changes in either inlet pressure or vapor pressure.

INSTALLATION & ADJUSTMENT

The Model 1356 should be installed in the Main Valve Control Piping between the ejector and the downstream body tap. Flow should be in the direction indicated by the arrow on the pilot body. A sensing line (1/4" O.D. tubing) should be installed from the pilot high pressure sensing port (see drawing) to a point upstream of the main valve. A second sensing line should be installed from the pilot low pressure sensing port to a point on the storage tank located to sense vapor pressure. To aid in accurate setting of the pilot, two pressure gauges-one measuring inlet pressure and one measuring vapor pressure-should be installed. Prior to start up, set the pilot to its fully closed position by turning the adjustment screw all the way clockwise. Start the pump. At this point the main valve will be fully closed or else open slightly, flowing at an inlet pressure higher than desired. Turn the adjustment screw slowly counterclockwise until inlet pressure falls to the desired point in excess of vapor pressure.

Tighten the lock nut on the adjustment screw and reinstall the cap. If adjustments are needed later, turning the adjustment clockwise increases the differential; turning it counterclockwise decreases the differential.

MAINTENANCE

Because of the simplicity of design of the 1356 Pilot, required maintenance is minimal. Fittings and bolts should be periodically checked and the body should be inspected for damage or excessive build-up of foreign material.

TROUBLESHOOTING

Troubleshooting the 1356 is equally simple. Major troubleshooting points are as follows:

1. To check for a ruptured diaphragm, disconnect the low pressure sense line from the pilot. Plug this line to prevent loss of vapor from tank. Pressurize the valve. A continuous discharge of fluid at the open sense port on the pilot indicates a ruptured diaphragm.
2. An indication of the pilot stem binding may be checked by removing the pilot bonnet and moving the stem by hand. If excessive drag is evident, disassemble the pilot and determine the cause.

OCV Control Valves
7400 East 42nd Place / Tulsa, Oklahoma 74145 -4744 USA / (918) 627-1942 / 888-OCV-VALV / FAX 918-622-8916
e-mail: sales@controlvalves.com / website: www/controlvalves.com

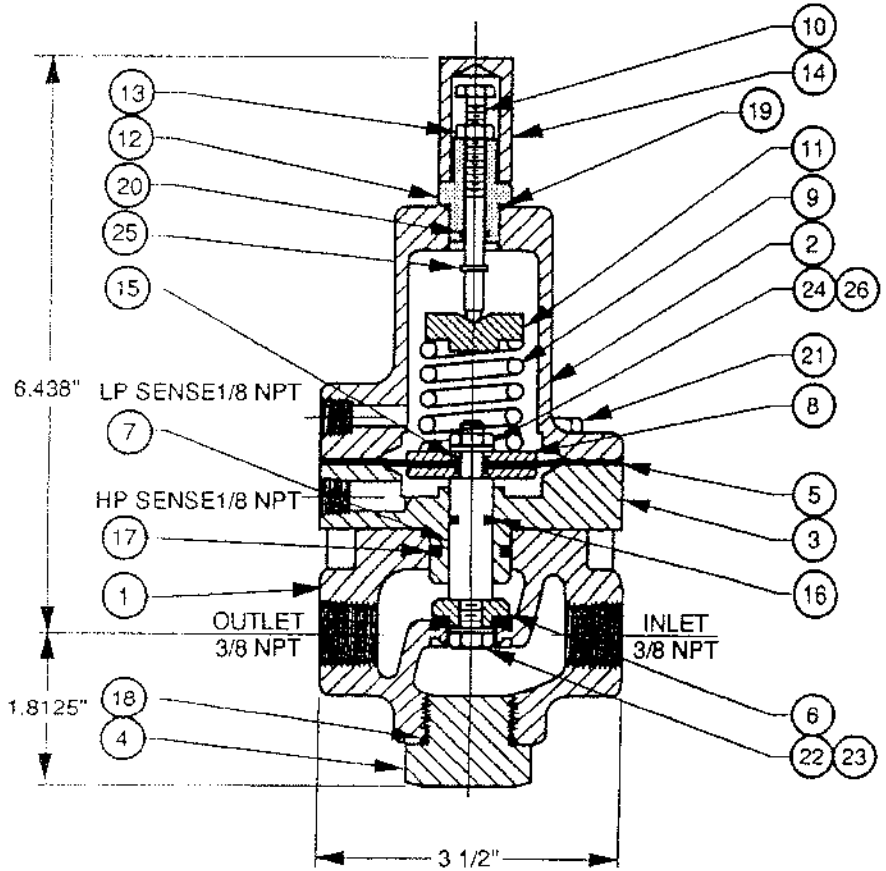

SPRING CHART		
651701	5-30 PSI	GREEN
651703	20-80 PSI	RED
651704	65-180 PSI	YELLOW
651702	100-300 PSI	BLUE

▲ - RECOMMENDED SPARE PARTS
VITON ELASTOMERS AVAILABLE
1/2" NPT AVAILABLE

	ITEM	PART NO.	QTY	DESCRIPTION	MATERIAL
	26	685700	1	LOCKWASHER	STN. STEEL
	25	630715	1	E-RING	STN. STEEL
	24	590712	1	HEX NUT	STN. STEEL
▲	23	685760	1	LOCKWASHER	STN. STEEL
	22	531700	1	HEX HD CAPSCREW	STN. STEEL
	21	531701	4	HEX HD CAPSCREW	STN. STEEL
▲	20	611008	2	O-RING	VITON
▲	19	611906	1	O-RING	VITON
▲	18	610119	1	O-RING	BUNA-N
▲	17	611116	1	O-RING	VITON
▲	16	611012	1	O-RING	VITON
▲	15	611010	2	O-RING	VITON
	14	300137	1	CAP	BRASS
	13	300709	1	NUT	STN. STEEL
	12	300716	1	ADJ SCREW GUIDE	STN. STEEL
	11	300729	1	SPRING RETAINER	STN. STEEL
	10	300724	1	ADJUSTING SCREW	STN. STEEL
	9	CHART	1	SPRING	STN. STEEL
	8	308702	2	DIAPHRAGM PLATE	STN. STEEL
	7	314002	1	STEM	MONEL
▲	6	310703	1	SEAT DISC	BUNA-N/SS
▲	5	694002	1	DIAPHRAGM	BUNA-N/NYLON
	4	310730	1	PLUG	STN. STEEL
	3	300719	1	ADAPTER	STN. STEEL
	2	304705	1	BONNET	STN. STEEL
	1	302702	1	BODY	STN. STEEL

CHG	E.C. NO.	DATE	BY

REVISIONS

REF DWG NO'S

MATERIAL	TOLERANCES
STN STL / BUNA-N / MONEL STEM	UNLESS NOTED FRACTIONAL ±1/64 DECIMAL ±.005 MACH. FINISH 125 ✓ ANGULAR ±1/2°
NO. REQ'D	DRAWN BY: RON — DATE: 4-11-95
SCALE: 1/2	CHKD. BY — DATE

OCV Control Valves
TULSA, OKLAHOMA U.S.A.

DIFFERENTIAL CONTROL PILOT

SIZE	DRAWING NUMBER	REV.
A	1356	

DESCRIPTION

MODEL 126 EJECTOR
The Model 126 ejector is a simple tee fitting with a fixed orifice in its inlet port. It provides the proper supply pressure to the main valve diaphragm chamber, allowing various two-way control pilots to control the valve position.

MODEL 126 EJECTOR DIAGRAM

Brass Construction / Stainless Steel Construction

MATERIAL	PART NUMBER	P (NPT)	T-TUBE O.D.	STD. ORIFICE	USED ON VALVE SIZES
Brass	213100	3/8"	3/8"	.125"	1 ¼"-6"
Brass	214100	1/2"	1/2"	.188"	8"-10"
Brass	215100	3/4"	3/4"	.188"	12"-16"
316 Stn. Steel	213700	1/4"	3/8"	.090"	1 ¼"-6"
316 Stn. Steel	214700	3/8"	1/2"	.125"	8"-10"
316 Stn. Steel	215700	1/2"	3/4"	.188"	12"-16"

Orifice bushings are stainless steel.

STAINLESS

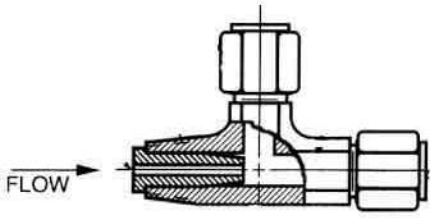

BRASS

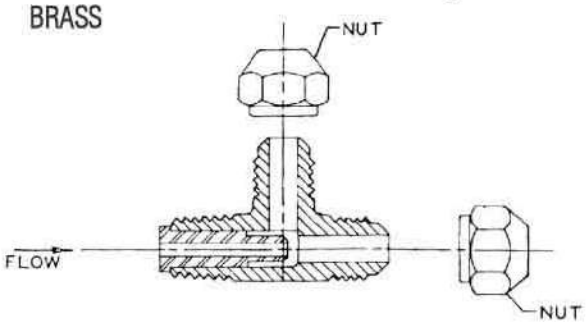

SCHEMATIC SYMBOL

The Model 126 Ejector is shown on OCV Valve Schematics as:

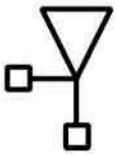

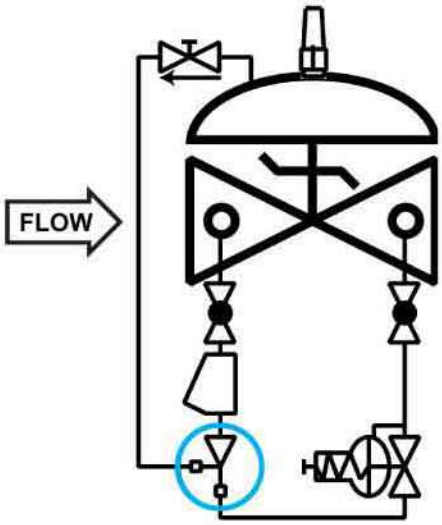

EXAMPLE: Shown here on a MODEL 127-3 Pressure Reducing Valve

TOLL FREE 1.888.628.8258 • **phone:** (918)627.1942 • **fax:** (918)622.8916 • 7400 East 42nd Place, Tulsa, OK 74145
email: sales@controlvalves.com • **website:** www.controlvalves.com

DESCRIPTION

The Model 141-2 Needle Valve is an adjustable restriction device installed in the control circuit tubing. The setting of the needle valve meters the flow into and out of the main valve diaphragm chamber, thus controlling the response speed of the main valve. Depending on the application, the needle valve may be used as a closing speed control, opening speed control, or both simultaneously.

◀**Needle Valves shown**
Sizes: 3/4" & 1/4"

MODEL 141-2 MATRIX

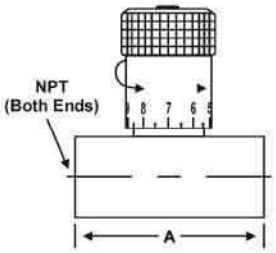

MATERIAL	PART NUMBER	INLET/OUTLET (NPT)	A	USED ON VALVE SIZE*
Brass	683100	1/4	2	1 ¼"-2"
Brass	683101	3/8	2 1/4	2 ½"-6"
Brass	683102	1/2	2 5/8	8"-10"
Brass	683103	3/4	3 1/4	12"-16"
Stn. Steel	683700	1/4	2	1 ¼"-2"
Stn. Steel	683702	3/8	2 1/4	2 ½"-6"
Stn. Steel	682704	1/2	2 5/8	8"-10"
Stn. Steel	683703	3/4	3 5/8	12"-16"

Note: Needle valve size may vary on valve application. Consult factory.

SCHEMATIC SYMBOL

The Model 141-2 Needle Valve is shown on OCV Valve Schematics as:

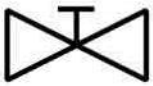

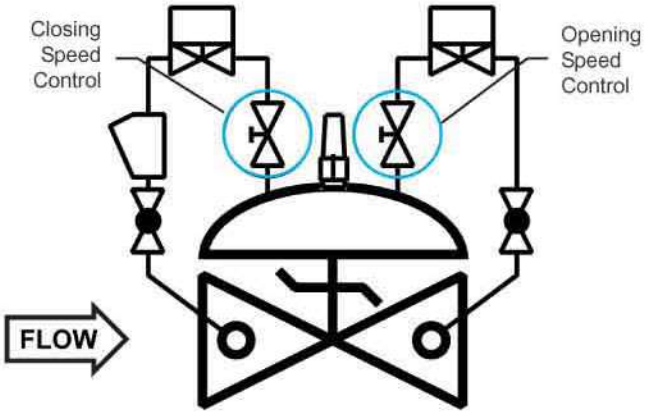

EXAMPLE: Shown here on a MODEL 115-3 DIGITAL VALVE as separate opening and closing speed controls.

TOLL FREE 1.888.628.8258 • **phone:** (918)627.1942 • **fax:** (918)622.8916 • 7400 East 42nd Place, Tulsa, OK 74145
email: sales@controlvalves.com • **website:** www.controlvalves.com

DESCRIPTION

MODEL 159 Y-STRAINER
The 159 Y-Strainer installs in the inlet piping of the pilot system and protects the pilot system from solid contaminants in the line fluid. It is the standard strainer for water service valves.

MODEL 159 Y-STRAINER MATRIX

MATERIAL	PART NUMBER	INLET/OUTLET (NPT)	BLOW OFF PORT (NP)	A	STD. MESH	USED ON VALVE SIZE
Bronze	660100	3/8	3/8	2 11/16	24	1 ¼"-6"
Bronze	660101	1/2	3/8	2 5/8	24	8"-10"
Bronze	660102	3/4	3/8	3 5/16	24	12"-16"
Stn. Steel	660700	3/8	1/4	2 1/2	20	1 ¼"-6"
Stn. Steel	660701	1/2	1/4	2 1/2	20	8"-10"
Stn. Steel	660702	3/4	1/4	3 1/8	20	12"-16"

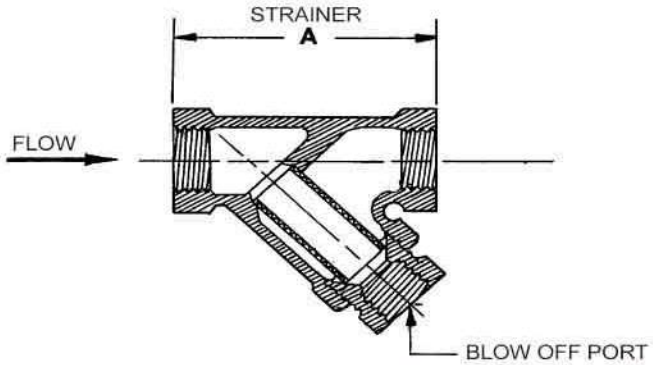

MATERIALS

Bronze, ASTM B62
Optional mesh sizes: 50,100

Stainless Steel, CF8-M (316)
Optional mesh sizes: 60, 80, 100

Screens are stainless steel

SCHEMATIC SYMBOL

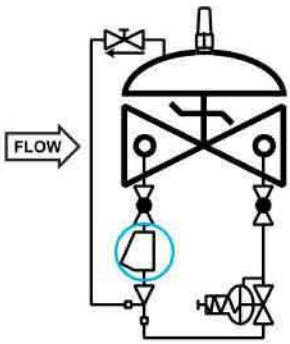

The Model 159 Y-Strainer is shown on OCV Valve Schematics as:

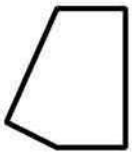

EXAMPLE: Shown here on a MODEL 127-3 Pressure Reducing Valve

MAINTENANCE

Routine cleaning and checking of the Y-Strainer will aid in keeping the control valve functioning properly. Pilot system isolation ball valves are supplied on valves equipped with the Model 159 Y-Strainer. These allow flushing of the screen through the blow off port, or removal of the screen itself for manual cleaning.

TOLL FREE 1.888.628.8258 • **phone:** (918)627.1942 • **fax:** (918)622.8916 • 7400 East 42nd Place, Tulsa, OK 74145
email: sales@controlvalves.com • **website:** www.controlvalves.com

DESCRIPTION

The Model 141-4 Ball Valve is a ¼-turn shutoff device used for isolating the pilot system from the main valve. They are extremely useful for performing routine maintenance and troubleshooting.

Ball valves are standard on water service valves; optional on fuel service valves.

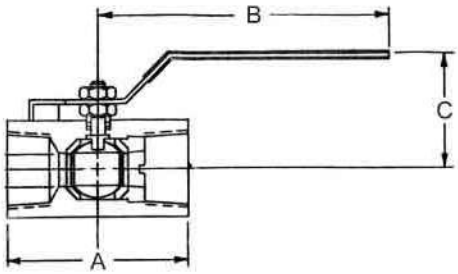

MODEL 141-4 MATRIX

MATERIAL	PART NUMBER	INLET/OUTLET (NPT)	A	B	C	USED ON VALVE SIZE*
Bronze	680100	3/8	1 3/4	3 1/2	1 7/8	1 ¼"-6"
Bronze	680101	1/2	2	3 1/2	2 1/4	8"-10"
Bronze	680102	3/4	3	4 3/4	2 1/4	12"-16"
Stn. Steel	680700	3/8	2	3 3/4	2 1/8	1 ¼"-6"
Stn. Steel	680701	1/2	2 1/4	3 3/4	2 1/2	8"-10"
Stn. Steel	680702	3/4	3	4 3/4	2 1/4	12"-16"

SCHEMATIC SYMBOL

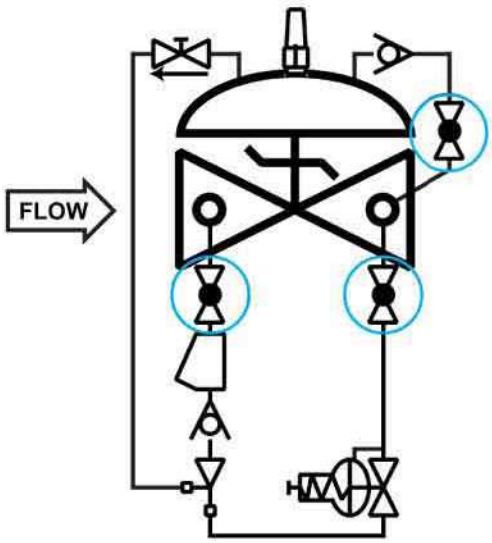

The Model 141-4 Ball Valve is shown on OCV Valve Schematics as:

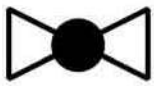

EXAMPLE: Shown here on a MODEL 127-4 Pressure Reducing / Check Valve.

TOLL FREE 1.888.628.8258 • **phone:** (918)627.1942 • **fax:** (918)622.8916 • 7400 East 42nd Place, Tulsa, OK 74145
email: sales@controlvalves.com • **website:** www.controlvalves.com

DESCRIPTION

The Model 155 Visual Indicator is a device that enables the user to determine the extent of opening of a control valve. It consists of an adaptor threaded into the center port of the valve bonnet, a rod threaded into the main valve stem, a sealing O-ring, and a protective clear plastic housing. The indicator rod moves as the valve opens and closes. It may be installed on virtually any OCV control valve, and can be done so without any disassembly of the valve itself.

WHERE USED - Standard on Series 94 Check Valves, Series 3330 Altitude Valves, and Series 22 Digital Control Valves. Optional on any other valve not employing a limit switch or position transmitter.

MODEL 155 MATRIX

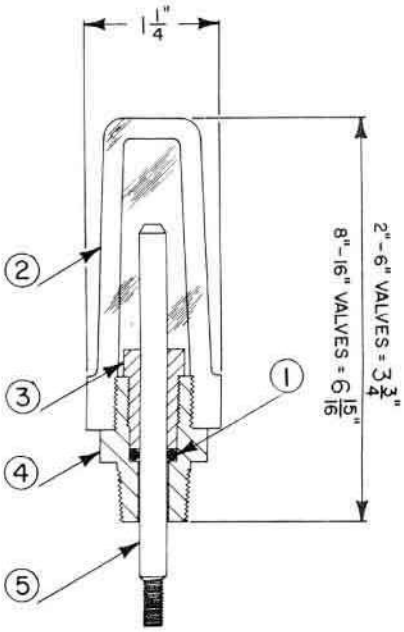

MATERIAL	PART NO. (BRASS\ ADAPTOR)	PART NO. (STAINLESS ADAPTOR)	VALVE TRAVEL (FULL STROKE)
1 1/4" - 1 1/2"	255100	255700	3/8"
2"	255100	255700	1/2"
2 1/2"	255100	255700	3/4"
3"	255100	255700	1"
4"	255101	255701	1 3/8"
6"	255102	255702	1 1/2"
8" - 10"	255103	255703	2 1/2"
12"	255104	255704	3"
14" - 16"	255105	255705	3 1/2", 4"
24"	255109	255709	6"

ITEM	DESCRIPTION
1	O-Ring
2	Housing
3	Bushing
4	Adaptor
5	Stem

SCHEMATIC SYMBOL

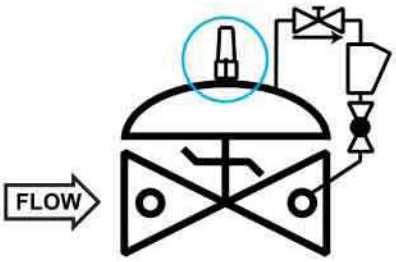

EXAMPLE: Shown here on a Model 94-1 Check Valve

The Model 155 is shown on OCV Valve Schematic as:

MATERIALS

Indicator Rod:	Monel
Adapter:	Brass (std.), Stainless Steel (optional)
Housing:	Butyrate (1 ¼" - 6") Acrylic (8" and larger)
O-Ring:	Viton® (std.) Buna-N, EPDM (optional)

TOLL FREE 1.888.628.8258 • **phone:** (918)627.1942 • **fax:** (918)622.8916 • 7400 East 42nd Place, Tulsa, OK 74145
email: sales@controlvalves.com • **website:** www.controlvalves.com