installation, operating, and maintenance instrucitons

diaphragm check valve with closing speed control

model 94-2

GENERAL DESCRIPTION

The OCV Model 94-2 check valve is a simple on-off valve which opens wide to allow forward flow and closes tightly to prevent backflow. It consists of the following:

1. **Model 65 Basic Valve Assembly,** a hydraulically-operated, diaphragm-actuated, globe or angle valve which closes with an elastomer-on-metal seal.
2. **Model 141-3 Flow Control Valve,** a needle-type valve which provide adjustable, restricted flow in one direction and free flow in the opposite direction. On the 94-2, the flow control valve is connected as a **closing speed control.**
3. **Model 159 Y-Strainer** (standard on water service valves) or **Model 123 Inline Strainer** (standard on fuel service valves). The strainer protects the pilot system from solid contaminants in the line fluid.
4. **Model 141-4 Ball Valve** (standard on water service valves, optional on fuel service valves), useful for isolating the pilot system for maintenance or troubleshooting.
5. **Model 155 Visual Indicator,** which enables the user to determine the position of the valve at a glance.

At user option, the 94-2 may also be equipped with a Model 150 Limit Switch Assembly which can be used to give an electrical indication of valve position.

THEORY OF OPERATION (REFER TO SCHEMATIC DIAGRAM):

The 94-2 operates on the balance between two pressures: upstream or inlet pressure acting under the seat of the valve, downstream or discharge pressure acting on the diaphragm via the single hydraulic line. When upstream pressure is the greater of the two (forward flow), the valve is forced open. When downstream pressure is greater (backflow), the valve closes at the rate set on the closing speed control.

The 94-2 has no opening speed control, thus opening is fairly rapid. However, due to the fact that fluid must be physically slower than other types of check valves, such as swing, lift or eccentric disc types. This fact means the startup surges associated with those types of check valves can be reduced somewhat by use of the 94-2.

By use of the closing speed control, shutdown surges can be dramatically reduced or eliminated. However, it must be remembered that some backflow will take place while the 94-2 is closing.

INSTALLATION

The 94-2 is furnished fully factory-assembled and ready for installation at the appropriate point in the system, typically on the discharge of a pump. The user is referred to the Basic Valve section of this manual for full installation details.

OCV Control Valves
7400 East 42nd Place / Tulsa, Oklahoma 74145 -4744 USA / (918) 627-1942 / 888-OCV-VALV / FAX 918-622-8916
e-mail: sales@controlvalves.com / website: www/controlvalves.com

STARTUP AND ADJUSTMENT

The following procedures should be followed in the order presented in order to effect an initial startup of the 94-2.

1. Close pilot system ball valve, if so equipped.
2. Turn the adjusting screw of the flow control valve fully **clockwise,** then back it off **three full turns.**
3. Start pump. If ball valve closed (Step 1), the valve will remain closed. If not equipped with ball valve, the valve will open.
4. Carefully loosen one of the pip plugs in the main valve bonnet until fluid appears around the threads. When only clear fluid (no air) is discharging, retighten the plug.
5. Open the pilot system ball valve and observe that the main valve opens.
6. Shut down the pump and observe that the main valve closes.
7. Start and stop pump several times as required to properly set the flow control valve to reduce shutdown surges to an acceptable level. **Clockwise** adjustment **decreases** closing speed; **counterclockwise** adjustment **increases** closing speed. CAUTION: Never close the flow control valve fully. To do so will prevent the main valve from closing at all.

MAINTENANCE

Due to the simplicity of design of the 94-2, required maintenance is minimal. However, the following checks, periodically performed, will do much to keep the valve operating properly and efficiently.

1. Check for chipped or peeling paint.
2. Check for leaks at fittings and around flanges and connections. Tighten as required.
3. If the valve is equipped with a Y-Strainer, check the screen for buildup of foreign material. Clean as required. This point is most important, as a clogged strainer can prevent the valve from operating. On new installations, it is recommended that the strainer be checked every day or two until experience dictates a greater or lesser interval.

TROUBLESHOOTING

In the event of malfunction of the 94-2, the following guide should enable the technician to isolate the specific cause of the problem.

A. MAIN VALVE FAILS TO OPEN
   1. Check pressure upstream and downstream of the valve. Upstream pressure must be higher in order for the 94-2 to open.
   2. Valve closed downstream of the 94-2. Open it.
   3. Main valve stem binding. Disassemble valve and determine cause. See Basic Valve section of this manual.

B. MAIN VALVE FAILS TO CLOSE
   1. Pilot system ball valve closed. Open it.
   2. Flow control valve fully closed. See Adjustment instructions.
   3. Main valve stem binding. Disassemble valve and determine cause. See Basic Valve section of this manual.

A NOTE ON DIAPHRAGM FAILURE: Unlike other models, a main valve diaphragm failure will not keep the 94-2 from operating. It will still function as a check valve, allowing forward flow and preventing reverse flow. The only difference is that, without the diaphragm, it will be little more than a lift check and will likely slam open and closed.

If you suspect that the diaphragm has ruptured, close the pilot system ball valve (if so equipped), and carefully loosen a pipe plug in the main valve bonnet. A **continuous** discharge of fluid from the loosened plug indicates the diaphragm is ruptured. See Basic Valve section of this manual.

MODEL 94-2

RON
1-12-96

DIAPHRAGM CHECK VALVE
with Closing Speed Control

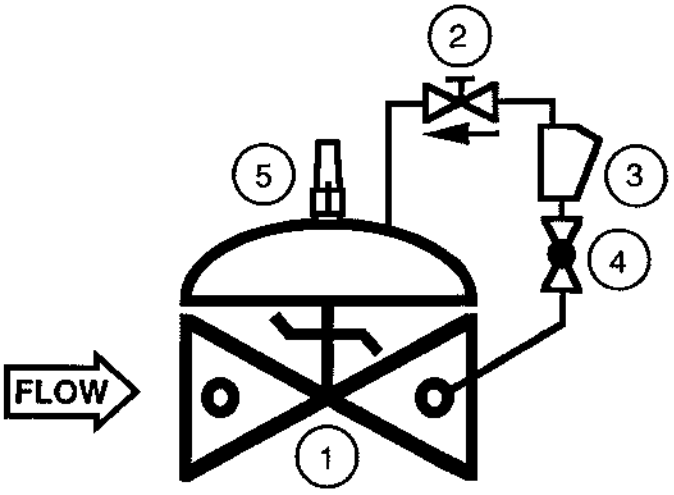

ITEM	PART NO.	QTY	DESCRIPTION
1	65	1	BASIC VALVE ASSEMBLY
2	141-3	1	FLOW CONTROL VALVE
3	159	1	Y-STRAINER
4	141-4	1	ISOLATION BALL VALVE
5	155	1	VISUAL INDICATOR

OCV Control Valves 7400 East 42nd Place / Tulsa, Oklahoma 74145 / 918-627-1942 / TWX 910-845-2227 / FAX 918-622-8916

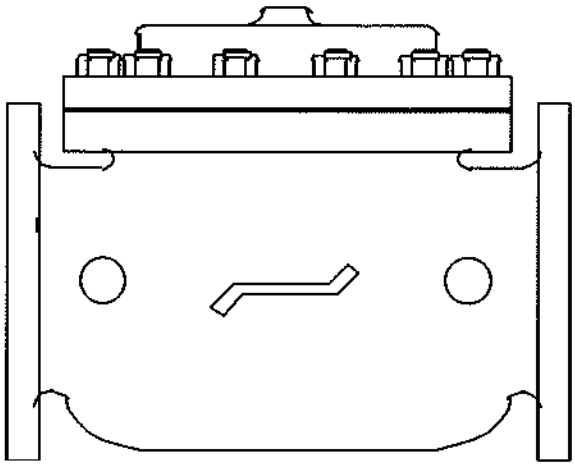

installation, operating, and maintenance instructions

series 65

basic control valve

GENERAL DESCRIPTION

The OCV Series 65 is a hydraulically-operated, diaphragm-actuated valve. It is available in either a globe (Model 65) or angle (Model 65A) configuration. The diaphragm is nylon-fabric bonded with synthetic rubber and forms a sealed chamber in the upper portion of the valve, separating operating pressure from line pressure. An elastomeric seat disc forms a tight seal with the valve seat when pressure is applied above the diaphragm.

FUNCTIONAL DESCRIPTION

Because the Series 65 is a hydraulically operated valve, it requires a minimum line pressure of approximately 5 psig in order to function. The valve functions on a simple principle of pressure differential. The line pressure at the inlet of the valve is bypassed through the pilot control piping to the diaphragm chamber of the valve. This pressure, together with the valve spring, works against the pressure under the valve seat. Because the effective area of the diaphragm is greater than that of the seat, the valve is held tightly closed. As the controlling pilot(s) allow the pressure to bleed off the diaphragm chamber, the two opposing pressures begin to balance and the valve will begin to open. The valve can be used to perform a simple on-off function, or with the proper pilot system, a modulating, or regulating function.

In cases where the line fluid is unusually dirty, or is otherwise unsuitable for operating the valve, an independent operating pressure source may be employed. The pressure available from such a source must be equal to, or greater than, line pressure.

INSTALLATION

In order to insure safe, accurate and efficient operation of the OCV control valve, the following list of checkpoints and procedures should be followed when installing the valve.

1. Make a careful visual inspection of the valve to insure that there has been no damage to the external piping, fittings or controls. Check that all fittings are tight.
2. Thoroughly flush all interconnecting piping of chips, scale and foreign matter prior to mounting the valve.
3. Install the valve in the line according to the flow arrow on the inlet flange. The arrow should point downstream.
4. Allow sufficient room around the valve for ease of adjustment and maintenance service.

In addition, it is highly recommended that:

1. Isolation valves (eg., gate or butterfly) be installed on the inlet and discharge sides of the valve to facilitate isolating the valve for maintenance.
2. Pressure gauges be installed at the inlet and outlet sides of the valve to provide monitoring of the valve during initial start-up and during operation. The body side ports, if unused by the pilot system, provide a convenient connection for the gauges.
3. All valves larger than 6" be installed horizontally, i.e., with the bonnet pointed up, for ease of adjustment and maintenance servicing.

MAINTENANCE

The OCV control valve requires no lubrication and a minimum of maintenance. However, a periodic inspection should be established to determine how the fluid being handled is affecting the efficiency of the valve. In a water system, for example, the fluid velocity as well as the substances occurring in natural waters, such as dissolved minerals and suspended particles, vary in every installation. The effect of these actions or substances must be determined by inspection. It is recommended that an annual inspection, which includes ex-

OCV Control Valves
7400 East 42nd Place / Tulsa, Oklahoma 74145 -4744 USA / (918) 627-1942 / 888-OCV-VALV / FAX 918-622-8916
e-mail: sales@controlvalves.com / website: www/controlvalves.com

amination of the valve interior, be conducted. Particular attention should be paid to the elastomeric parts, i.e., the diaphragm and seat disc. Any obviously worn parts should be replaced.

REPAIR PROCEDURES

In the event of malfunction of the OCV control valve, troubleshooting should be conducted according to the procedures outlined for the specific model of valve. Then, if those steps indicate a problem with the main valve, this section will outline the procedures necessary to correct the problem.

Problems with the main valve can be classed in three basic categories:

1. VALVE FAILS TO OPEN
   a. Diaphragm damaged* - See Procedure A
   b. Stem binding - See Procedure B
2. VALVE FAILS TO CLOSE
   a. Diaphragm damaged* - See Procedure A
   b. Stem binding - See Procedure B
   c. Object lodged in valve - See Procedure B
3. VALVE OPENS AND CLOSES BUT LEAKS WHEN CLOSED
   a. Seat disc damaged - See Procedure C
   b. Seat ring damaged - See Procedure D

   **A diaphragm failure can prevent the valve from either opening or closing, depending on the flow direction. Most water service valves flow "under the seat", in which case a diaphragm failure will keep the valve from closing. On the other hand, most fuel service valves flow "over the seat", in which case a diaphragm failure will keep the valve from opening. To determine which you have, examine the bridge mark cast into the side of the valve body, then compare it with the figures below.*

PROCEDURE A : DIAPHRAGM REPLACEMENT

1. Isolate the valve from the system by closing upstream amd downstream block valves.
2. Loosen one of the tubing connections on the bonnet. Allow any residual pressure to bleed off.
3. Remove all tubing connected at the bonnet.
4. Remove the bonnet nuts.
5. Remove the bonnet. If the bonnet sticks in place, it may be loosened by rapping sharply around its edge with a *rubber-headed* mallet. *NOTE: 8" and larger valves are equipped with eye bolts through which a chain can be fastened to aid in lifting the bonnet.*
6. Remove the spring.
7. Remove the diaphragm plate capscrews and the diaphragm plate.
8. Remove the old diaphragm.
9. Making sure the dowel pin holes are in the proper location, place the new diaphragm over the studs and press down until it is flat against the body and spool.
10. Replace the diaphragm plate and the diaphragm plate capscrews.
11. Tighten all diaphragm plate capscrews snugly.
12. Replace the spring.
13. Replace the bonnet and reinstall the bonnet nuts.
14. Tighten the bonnet nuts snugly using a criss-cross tightening pattern.
15. Reinstall the control tubing.
16. Reopen the upstream and downstream block valves.
17. Before placing the valve back in service, perform the air bleed procedure described in the first section of this manual.

PROCEDURE B: CORRECTION OF BINDING STEM

1. Perform Steps 1 thru 6 of Procedure A, above.
2. Remove the spool assembly from the valve. *NOTE:*

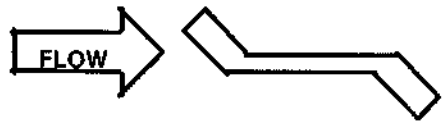

FLOW UNDER SEAT
DIAPHRAGM FAILURE = VALVE FAILS TO CLOSE

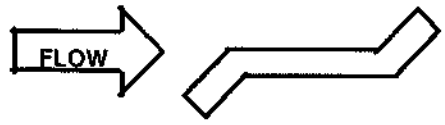

FLOW OVER SEAT
DIAPHRAGM FAILURE = VALVE FAILS TO OPEN

On smaller valves, this can be accomplished simply by grasping the stem and pulling upward. Valves 6" and larger have the top of the stem threaded to accept an eyebolt to aid in lifting the spool out of the body. 6" thru 12" valves are threaded 3/8-16. 14" and 16" valves are threaded 5/8-11.

3. Carefully examine both ends of the stem for deep scratches, scoring or buildup of mineral deposits.

Polish the stem if necessary using a fine grade of emery cloth.

4. Similarly, examine and polish the upper bushing (in the bonnet) and the lower guide (in the seat ring).
5. Reinstall the spool assembly.
6. Reassemble the valve, following Steps 12 thru 17 in Procedure A.

PROCEDURE C: SEAT DISC REPLACEMENT

1. Perform Steps 1 and 2 of Procedure B, above.
2. With the spool assembly removed from the body, remove the seat retainer screws.
3. Slide the seat retainer off the lower end of the stem.
4. Remove the seat disc from its groove in the spool. *NOTE: The seat disc may fit quite tightly in the groove. If necessary, it may be pried out using a thin-bladed screwdriver or similar tool.*
5. Install the new seat disc in the groove.
6. Reinstall the seat retainer and tighten the seat retainer screws.
7. Reassemble the valve, following Steps 5 and 6 of Procedure B.

PROCEDURE D: SEAT RING REPLACEMENT

NOTE: It is rare for a seat ring to require replacement. Minor nicks and scratches in the seating surface can usually be smoothed out with emery cloth.

1. Perform Steps 1 and 2 of Procedure B, above.
2. If you are working on a 4" or smaller valve, follow Steps 3 thru 9, below.
3. If you are working on a 6" or larger valve, follow Steps 10 thru 16, below.
4. Seat rings in valves 4" and smaller are threaded into the valve body. To remove, you will need a special seat ring tool. You may fabricate one using standard pipe as shown in the sketch below, or one may be purchased from OCV.
5. Using the seat ring tool, unthread the seat ring from the body.
6. Remove the old o-ring from the counterbore in the body.
7. Install the new o-ring in the counterbore.
8. Using the seat ring tool, install the new seat ring.
9. Reassemble the valve, following Steps 5 & 6 of Procedure B.
10. Seat rings in valves 6" and larger are bolted into the body with socket head capscrews. In addition you will note that the seat ring is equipped with additional threaded holes that may be used for "jacking" the seat ring out of the body.
11. Remove the socket head capscrews.
12. Remove the old seat ring from the body by temporarily installing two or more of the capscrews in the "jacking" holes.
13. Install a new o-ring in the groove of the new seat ring. Lubricate the o-ring and outer seat ring wall with Vaseline® or similar lubricant.
14. Install the new seat ring in the body, making sure that the capscrew holes line up.
15. Replace and tighten all the capscrews.
16. Reassemble the valve, following Steps 5 and 6 of Procedure B.

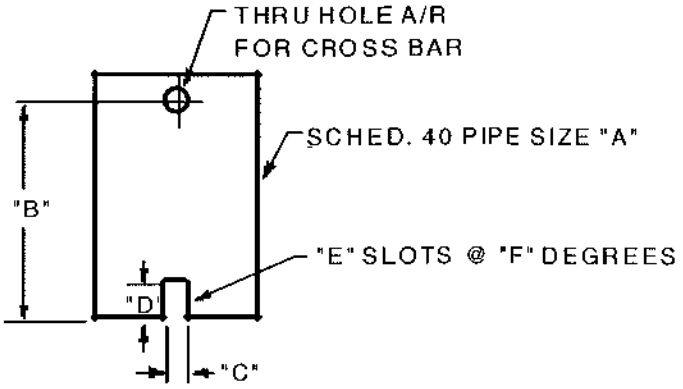

VALVE SIZE	"A" PIPE SIZE	"B" MIN. LENGTH	"C" SLOT WIDTH	"D" SLOT DEPTH	"E" NO. OF SLOTS	"F" SLOT SPACING
1-1/4"	3/4"	6"	3/8"	3/8"	2	180°
1-1/2"	3/4"	6"	3/8"	3/8"	2	180°
2"	1-1/2"	7"	3/8"	3/8"	2	180°
2-1/2"	2"	8"	1/2"	1/2"	3	120°
3"	2-1/2"	9"	5/8"	5/8"	2	180°
4"	3"	10"	5/8"	5/8"	2	180°

REVISED 3-17-97

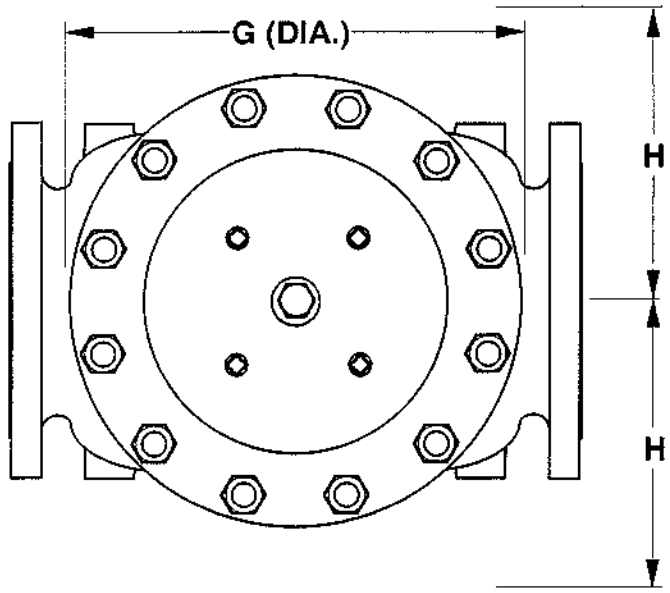

DIM	ANSI CLASS	VALVE SIZE 1 1/4	1 1/2	2	2 1/2	3	4	6	8	10	12	14	16	24
A	S.E	8.75	8.75	9.88	10.50	13.00	–	–	–	–	–	–	–	–
	150	8.50	8.50	9.38	10.50	12.00	15.00	17.75	25.38	29.75	34.00	39.00	40.38	62.00
	300	8.75	8.75	9.88	11.12	12.75	15.62	18.62	26.38	31.12	35.50	40.50	42.00	63.75
B	SE	1.44	1.44	1.69	1.88	2.25	–	–	–	–	–	–	–	–
	150	2.31	2.50	3.00	3.50	3.75	4.50	5.50	6.75	8.00	9.50	10.62	11.75	16.00
	300	2.62	3.06	3.25	3.75	4.12	5.00	6.25	7.50	8.75	10.25	11.50	12.75	18.00
C	SE	4.38	4.38	4.75	6.00	6.50	–	–	–	–	–	–	–	–
	150	4.25	4.25	4.75	6.00	6.00	7.50	10.00	12.69	14.88	17.00	–	20.81	–
	300	4 3/8	4.38	5.00	6.38	6.38	7.81	10.50	13.19	15.56	17.75	–	21.62	–
D	SE	3.12	3.12	3.88	4.00	4.50	–	–	–	–	–	–	–	–
	150	3.00	3.00	3.88	4.00	4.00	5.50	6.00	8.00	11.38	11.00	–	15.69	–
	300	3.25	3.25	4.12	4.38	4.38	5.81	6.50	8.50	12.06	11.75	–	16.50	–
E	ALL	6.00	6.00	6.00	7.00	6.50	7.92	10.00	11.88	15.38	17.00	18.00	19.00	27.00
F	ALL	3.88	3.88	3.88	3.88	3.88	3.88	3.88	6.38	6.38	6.38	6.38	6.38	8.00
G	ALL	6.00	6.00	6.75	7.69	8.75	11.75	14.00	21.00	24.50	28.00	31.25	34.50	52.00
H	ALL	10.00	10.00	11.00	11.00	11.00	12.00	13.00	14.00	17.00	18.00	20.00	20.00	28.50

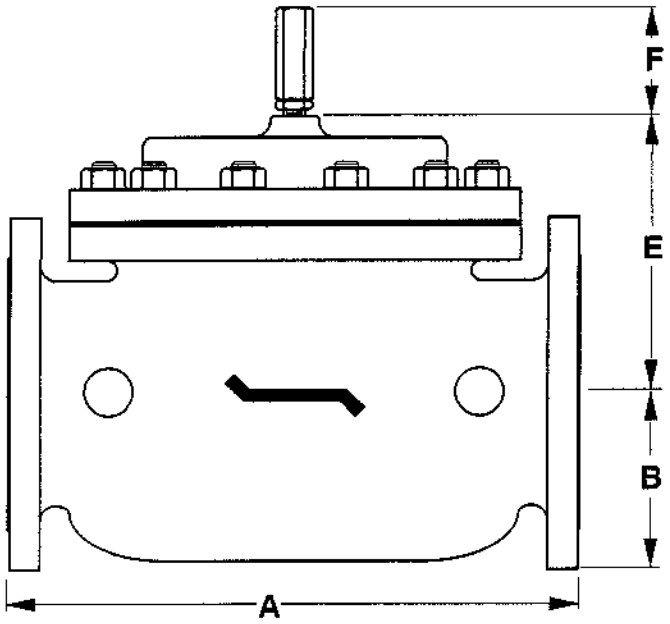

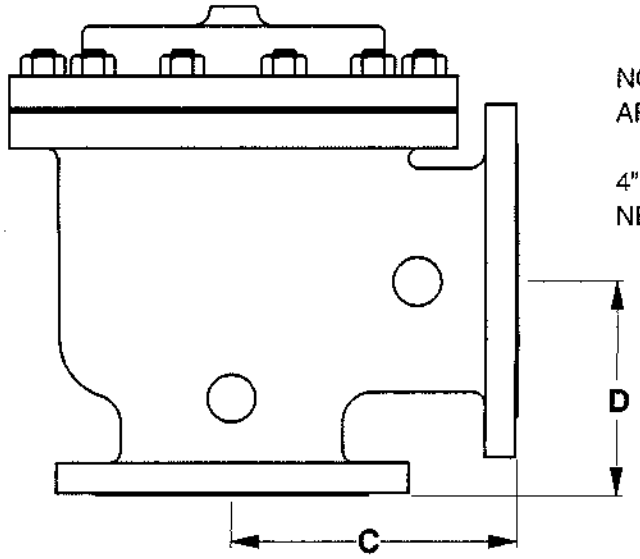

NOTE: 3" VALVE DIMENSIONS ARE FOR NEW MODEL 3100

4" VALVE DIMENSIONS ARE FOR NEW MODEL 4400

REV. A SDJ 6-6-02
REV. B SDJ 2-3-03

TOLERANCES
UNLESS NOTED FRACTIONAL ±1/64 DECIMAL ±.005 MACH. FINISH 125√ ANGULAR ±1/2°

DRAWN BY	DATE
SDJ	10-6-97
CHKD. BY	DATE

OCV Control Valves
TULSA, OKLAHOMA U.S.A.

GENERAL VALVE DIMENSIONS

SIZE	DRAWING NUMBER	REV.
A	65D	B

DESCRIPTION

The Model 141-3 Flow Control Valve is an adjustable restriction device, installed in the control circuit tubing. The flow control valve differs from a standard needle valve in that it includes an internal check valve. Thus it allows free flow in one direction (through the check) and restricted flow in the other direction (through the needle). The setting of the flow control valve meters the flow into or out of the main valve diaphragm chamber, thus controlling either the opening or closing speed of the main valve. These can be installed in series for separate opening and closing speed control. Restricted flow is in the direction of the flow arrow on the body.

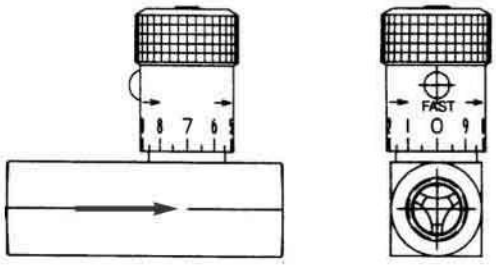

MODEL 141-3 MATRIX

MATERIAL	PART NUMBER	INLET/OUTLET (NPT)	A	USED ON VALVE SIZE*
Brass	682100	1/4	2 3/8	1 ¼"-2"
Brass	682101	3/8	2 3/4	2 ½"-6"
Brass	682102	1/2	3 1/4	8"-10"
Brass	682103	3/4	3 7/8	12"-16"
Stn. Steel	682700	1/4	2 3/8	1 ¼"-2" Stn.
Stn. Steel	682701	3/8	2 3/4	2 ½"-6"
Stn. Steel	682702	1/2	3 1/4	8"-10"
Stn. Steel	682703	3/4	3 5/8	12"-16"

Note: Flow control valve use and size may vary on valve application. Consult factory.

SCHEMATIC SYMBOL

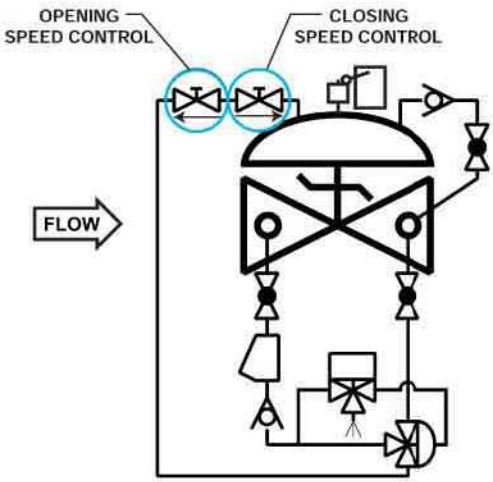

The Model 141-3 Flow Control Valve is shown on OCV Valve Schematics as:

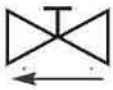

EXAMPLE: Shown here on a MODEL 125 Pump Control Valve as separate opening and closing speeds.

TOLL FREE 1.888.628.8258 • **phone:** (918)627.1942 • **fax:** (918)622.8916 • 7400 East 42nd Place, Tulsa, OK 74145
email: sales@controlvalves.com • **website:** www.controlvalves.com

DESCRIPTION

MODEL 159 Y-STRAINER
The 159 Y-Strainer installs in the inlet piping of the pilot system and protects the pilot system from solid contaminants in the line fluid. It is the standard strainer for water service valves.

MODEL 159 Y-STRAINER MATRIX

MATERIAL	PART NUMBER	INLET/OUTLET (NPT)	BLOW OFF PORT (NP)	A	STD. MESH	USED ON VALVE SIZE
Bronze	660100	3/8	3/8	2 11/16	24	1 ¼"-6"
Bronze	660101	1/2	3/8	2 5/8	24	8"-10"
Bronze	660102	3/4	3/8	3 5/16	24	12"-16"
Stn. Steel	660700	3/8	1/4	2 1/2	20	1 ¼"-6"
Stn. Steel	660701	1/2	1/4	2 1/2	20	8"-10"
Stn. Steel	660702	3/4	1/4	3 1/8	20	12"-16"

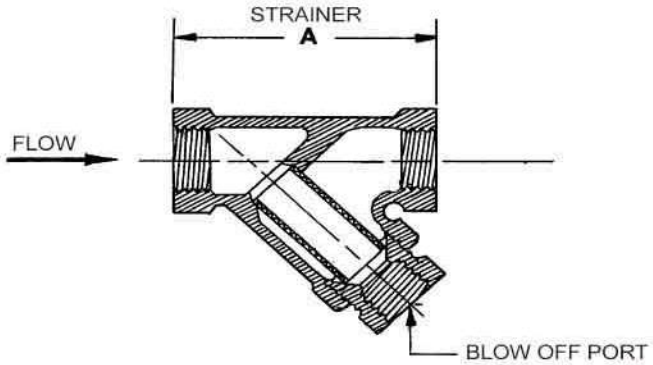

MATERIALS

Bronze, ASTM B62
Optional mesh sizes: 50,100

Stainless Steel, CF8-M (316)
Optional mesh sizes: 60, 80, 100

Screens are stainless steel

SCHEMATIC SYMBOL

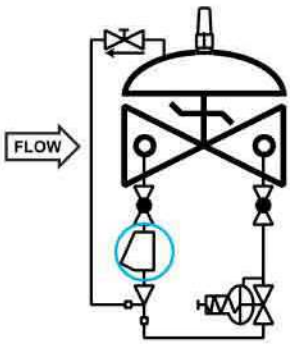

The Model 159 Y-Strainer is shown on OCV Valve Schematics as:

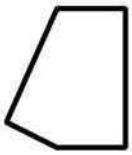

EXAMPLE: Shown here on a MODEL 127-3 Pressure Reducing Valve

MAINTENANCE

Routine cleaning and checking of the Y-Strainer will aid in keeping the control valve functioning properly. Pilot system isolation ball valves are supplied on valves equipped with the Model 159 Y-Strainer. These allow flushing of the screen through the blow off port, or removal of the screen itself for manual cleaning.

TOLL FREE 1.888.628.8258 • **phone:** (918)627.1942 • **fax:** (918)622.8916 • 7400 East 42nd Place, Tulsa, OK 74145
email: sales@controlvalves.com • **website:** www.controlvalves.com

DESCRIPTION

The Model 141-4 Ball Valve is a ¼-turn shutoff device used for isolating the pilot system from the main valve. They are extremely useful for performing routine maintenance and troubleshooting.

Ball valves are standard on water service valves; optional on fuel service valves.

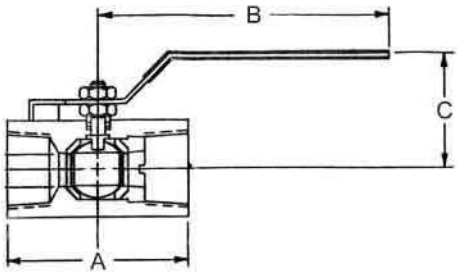

MODEL 141-4 MATRIX

MATERIAL	PART NUMBER	INLET/OUTLET (NPT)	A	B	C	USED ON VALVE SIZE*
Bronze	680100	3/8	1 3/4	3 1/2	1 7/8	1 ¼"-6"
Bronze	680101	1/2	2	3 1/2	2 1/4	8"-10"
Bronze	680102	3/4	3	4 3/4	2 1/4	12"-16"
Stn. Steel	680700	3/8	2	3 3/4	2 1/8	1 ¼"-6"
Stn. Steel	680701	1/2	2 1/4	3 3/4	2 1/2	8"-10"
Stn. Steel	680702	3/4	3	4 3/4	2 1/4	12"-16"

SCHEMATIC SYMBOL

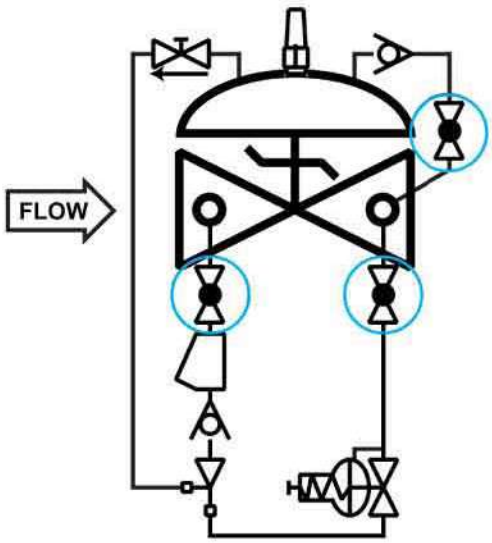

The Model 141-4 Ball Valve is shown on OCV Valve Schematics as:

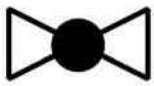

EXAMPLE: Shown here on a MODEL 127-4 Pressure Reducing / Check Valve.

TOLL FREE 1.888.628.8258 • **phone:** (918)627.1942 • **fax:** (918)622.8916 • 7400 East 42nd Place, Tulsa, OK 74145
email: sales@controlvalves.com • **website:** www.controlvalves.com

DESCRIPTION

The Model 155 Visual Indicator is a device that enables the user to determine the extent of opening of a control valve. It consists of an adaptor threaded into the center port of the valve bonnet, a rod threaded into the main valve stem, a sealing O-ring, and a protective clear plastic housing. The indicator rod moves as the valve opens and closes. It may be installed on virtually any OCV control valve, and can be done so without any disassembly of the valve itself.

WHERE USED - Standard on Series 94 Check Valves, Series 3330 Altitude Valves, and Series 22 Digital Control Valves. Optional on any other valve not employing a limit switch or position transmitter.

MODEL 155 MATRIX

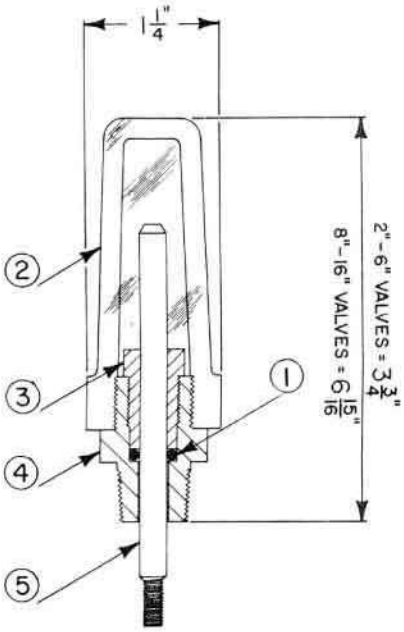

MATERIAL	PART NO. (BRASS\ ADAPTOR)	PART NO. (STAINLESS ADAPTOR)	VALVE TRAVEL (FULL STROKE)
1 1/4" - 1 1/2"	255100	255700	3/8"
2"	255100	255700	1/2"
2 1/2"	255100	255700	3/4"
3"	255100	255700	1"
4"	255101	255701	1 3/8"
6"	255102	255702	1 1/2"
8" - 10"	255103	255703	2 1/2"
12"	255104	255704	3"
14" - 16"	255105	255705	3 1/2", 4"
24"	255109	255709	6"

ITEM	DESCRIPTION
1	O-Ring
2	Housing
3	Bushing
4	Adaptor
5	Stem

SCHEMATIC SYMBOL

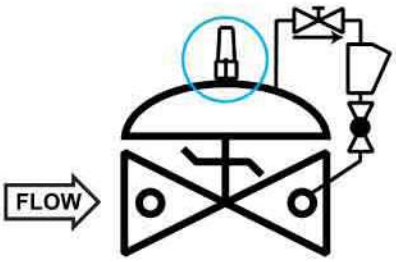

EXAMPLE: Shown here on a Model 94-1 Check Valve

The Model 155 is shown on OCV Valve Schematic as:

MATERIALS

Indicator Rod:	Monel
Adapter:	Brass (std.), Stainless Steel (optional)
Housing:	Butyrate (1 ¼" - 6") Acrylic (8" and larger)
O-Ring:	Viton® (std.) Buna-N, EPDM (optional)

TOLL FREE 1.888.628.8258 • **phone:** (918)627.1942 • **fax:** (918)622.8916 • 7400 East 42nd Place, Tulsa, OK 74145
email: sales@controlvalves.com • **website:** www.controlvalves.com