Model 115-2 (Aviation Fueling)

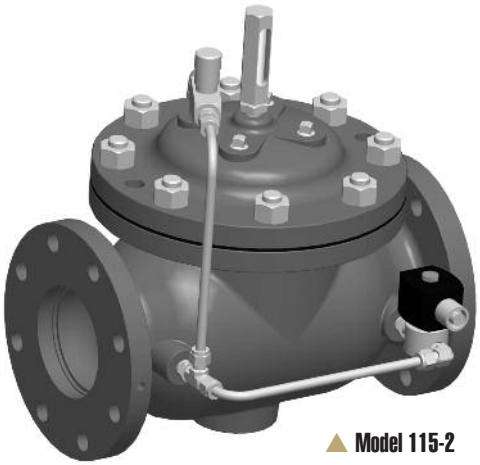

▲ Model 115-2

The Model 115-2 has an extremely wide range of applications: anywhere it is necessary to open and close a valve electrically.
Typical examples include:

- ▶Process control
- ▶Petroleum loading terminals
- ▶Storage tank level control

SERIES FEATURES

- ▶Electrically operated solenoid allows valve to open or close
- ▶Can be maintained without removal from the line
- ▶Adjustable response speed
- ▶Factory tested and can be pre-set to your requirements

OPERATION

A two-way solenoid, when closed, causes the main valve to close. Opening the solenoid opens the valve. The pilot system is equipped with a needle valve that allows the opening and closing speed of the valve to be adjusted.

The solenoid can be supplied normally closed (energize to open) or normally open (energize to close).

COMPONENTS

The Model 115-2 consists of the following components, arranged as shown on the schematic diagram:

1.) Model 65 Basic Control Valve

2.) Model 451 Two-Way Solenoid Pilot

3.) Model 126 Ejector

4.) Model 141-2 Needle Valve

5.) Model 123 Inline Strainer

SCHEMATIC

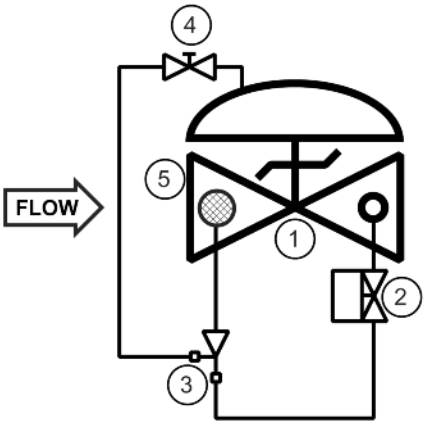

RECOMMENDED INSTALLATION

▶Install the valve with adequate space above and around the valve to facilitate servicing. Refer to the Dimension Table.
▶Valve should be installed with the bonnet (cover) at the top, particularly 8" and larger valves, and any valve with a limit switch.
▶Shut-off valves should be installed upstream and downstream of the control valve. These are used to isolate the valve during start-up and maintenance.
▶Following main valve installation, the solenoid must be wired into the user's control system. This is a simple two-wire (plus ground) connection.

SIZING

Definitive sizing information can be found in the Series 115 section of the OCV Catalog and Engineering section Performance Charts. Consult the factory for assistance.

MAX. PRESSURE

(The pressures listed here are maximum working pressures at 100°F)

END CONNECTIONS	DUCTILE IRON	STEEL/STN STL	ALUMINUM
Threaded	640 psi	640 psi	285 psi
Grooved	300 psi	300 psi	200 psi
150# Flanged	250 psi	285 psi	285 psi
300# Flanged	640 psi	740 psi	---

Note: Working pressures of solenoids vary greatly, consult factory on application of OCV Model 115-2 valves.

MAXIMUM FLUID FLOW

SIZE (INCHES)		1.25"	1.5"	2"	2.5"	3"	4"	6"	8"	10"	12"	14"	16"	18"	20"	24"
7.5 FT/SEC (MILITARY)	MAX	40	50	80	120	180	300	680	1200	1850	2650	3200	4150	5250	6550	9400
15 FT/SEC (MAX RECOMMENDED)	FLOW	70	100	160	230	350	600	1350	2350	3700	5250	6350	8300	10500	13100	18800
20 FT/SEC (MAX CONTINUOUS)	(GPM)	100	130	210	300	470	800	1800	3150	4950	7000	8450	11100	14000	17400	25100

U.S. Military valves cannot exceed a max velocity of 7.5 ft/sec. Max recommended fluid flow for petroleum fluids is 15 ft/sec. Max continuous flow for all fluids is 20 ft/sec.

TOLL FREE 1.888.628.8258 ● **phone:** (918)627.1942 ● **fax:** (918)622.8916 ● 7400 East 42nd Place, Tulsa, OK 74145
email: sales@controlvalves.com ● **website:** www.controlvalves.com

Model 115-2 (Aviation Fueling)

SIZES
GLOBE/ANGLE
Screwed Ends - 1 1/4" - 3"
Grooved Ends - 1 1/2" - 6" (globe)
1-1/2" - 6" (angle)
Flanged Ends - 1 1/4" - 24" (globe)
1 1/4" - 16" (angle)

FLUID OPERATING TEMPERATURE RANGE
(Valve Elastomers)
Buna-N -40°F to 180°F
Viton 20°F to 230°F
Fluorosilicone -40°F to 150°F
EPDM 0°F to 230°F

MATERIALS Consult factory for others.
Body/Bonnet: Ductile Iron (epoxy coated), Carbon Steel (epoxy coated), Stainless Steel, Aluminum
Seat Ring: Stainless Steel, Bronze
Stem: Stainless Steel, Monel
Spring: Stainless Steel
Diaphragm: Buna-N, Viton, (Nylon reinforced)
Seat Disc: Buna-N, Viton
Pilot: Stainless Steel, Bronze
Other pilot system components:
Stainless Steel, Bronze/Brass
Tubing & Fittings: Stainless Steel, Copper/Brass

SOLENOID
Enclosure: Explosion Proof NEMA 4X, 6P, 7, 9
Body: Stainless Steel, Brass
Voltages: 24, 120, 240, 480 VAC
12, 24 VDC
Note: Working pressures of solenoids vary greatly, consult factory on application of OCV Model 115-2 valves.

SPECIFICATIONS (Typical Aviation Fueling Application)

The solenoid shut-off valve shall open and close via discrete electrical signals. The valve shall be equipped with a two-way solenoid valve that will allow the valve to open when <energized, deenergized>.

DESIGN
The solenoid valve shall be a single-seated, line pressure operated, diaphragm actuated, pilot controlled globe valve. The valve shall seal by means of a corrosion-resistant seat and a resilient, rectangular seat disc. These, and other parts, shall be replaceable without removing the valve from the line. The stem of the main valve shall be guided top and bottom by integral bushings. Alignment of the body, bonnet and diaphragm assembly shall be by precision dowel pins. The diaphragm shall not be used as a seating surface, nor shall the pistons be used as an operating means. The pilot system shall be furnished complete and installed on the main valve. It shall include a needle valve, inline strainer and solenoid valve. The solenoid shut-off valve shall be operationally and hydrostatically tested prior to shipment.

MATERIALS OF CONSTRUCTION
The main valve body and bonnet shall be ductile iron. All ferrous surfaces shall be coated with 4 mils of epoxy. The main valve seat ring shall be stainless steel. Elastomers (diaphragms, resilient seats and O-rings) shall be Buna-N. The needle valve and control line tubing shall be stainless steel. The solenoid shall have a stainless steel body, explosion-proof enclosure and be suitable for operation on <voltage>.

OPERATING CONDITIONS
The solenoid shut-off valve shall be suitable for pressures of <X to X> psi at flow rates up to <X> gpm.

ACCEPTABLE PRODUCTS
The solenoid shut-off valve shall be a <size> Model 115-2, <globe pattern, angle pattern>, with <150# flanged, 300# flanged, threaded, grooved> end connections, as manufactured by OCV Control Valves, Tulsa, Oklahoma, USA.

U.S. DIMENSIONS - INCHES

DIM	END CONN.	1 1/4-1 1/2	2	2 1/2	3	4	6	8	10	12	14	16	24
	SCREWED	8 3/4	9 7/8	10 1/2	13	--	--	--	--	--	--	--	--
A	GROOVED	8 3/4	9 7/8	10 1/2	13	15 1/4	20	--	--	--	--	--	--
	150# FLGD	8 1/2	9 3/8	10 1/2	12	15	17 3/4 *	25 3/8	29 3/4	34	39	40 3/8	62
	300# FLGD	8 3/4	9 7/8	11 1/8	12 3/4	15 5/8	18 5/8 *	26 3/8	31 1/8	35 1/2	40 1/2	42	63 3/4
	SCREWED	4 3/8	4 3/4	6	6 1/2	--	--	--	--	--	--	--	--
C	GROOVED	4 3/8*	4 3/4	6	6 1/2	7 5/8	--	--	--	--	--	--	--
ANGLE	150# FLGD	4 1/4	4 3/4	6	6	7 1/2	10	12 11/16	14 7/8	17	--	20 13/16	--
	300# FLGD	4 3/8	5	6 3/8	6 3/8	7 13/16	10 1/2	13 3/16	15 9/16	17 3/4	--	21 5/8	--
	SCREWED	3 1/8	3 7/8	4	4 1/2	--	--	--	--	--	--	--	--
D	GROOVED	3 1/8*	3 7/8	4	4 1/2	5 5/8	--	--	--	--	--	--	--
ANGLE	150# FLGD	3	3 7/8	4	4	5 1/2	6	8	11 3/8	11	--	15 11/16	--
	300# FLGD	3 1/8	4 1/8	4 3/8	4 3/8	5 13/16	6 1/2	8 1/2	12 1/16	11 3/4	--	16 1/2	--
E	ALL	6	6	7	6 1/2	8	10	11 7/8	15 3/8	17	18	19	27
F (OPT)	ALL	3 7/8	3 7/8	3 7/8	3 7/8	3 7/8	3 7/8	6 3/8	6 3/8	6 3/8	6 3/8	6 3/8	8
H	ALL	10	11	11	11	12	13	14	17	18	20	20	28 1/2

*Note: for military fueling valves, 6" 150# flanges have 20" face to face dimensions and 6" 300# flanges have 21" face to face dimensions.

For maximum efficiency, the OCV control valve should be mounted in a piping system so that the valve bonnet (cover) is in the top position. Other positions are acceptable but may not allow the valve to function to its fullest and safest potential. In particular, please consult the factory before installing 8" and larger valves, or any valves with a limit switch, in positions other than described. Space should be taken into consideration when mounting valves and their pilot systems.

A routine inspection & maintenance program should be established and conducted yearly by a qualified technician. Consult our factory @ **1-888-628-8258** for parts and service.

How to order your Model 115-2 valve
When ordering please provide:
Fluid to be controlled - Model Number - Size - Globe or Angle - End Connection - Body Material - Trim Material - Solenoid Voltage - Energize to Open or Close Valve - Special Requirements / Installation Requirements

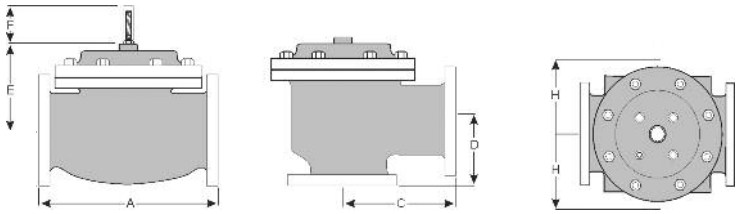

QUALITY SYSTEM REGISTERED TO ISO 9001

United States/Canada Joint Certification Program (JCP) Certification Number 0073030

Represented by:

TOLL FREE 1.888.628.8258 • **phone:** (918)627.1942 • **fax:** (918)622.8916 • 7400 East 42nd Place, Tulsa, Oklahoma 74145
email: sales@controlvalves.com • **website:** www.controlvalves.com