Model 127-80 (Terminal Services)

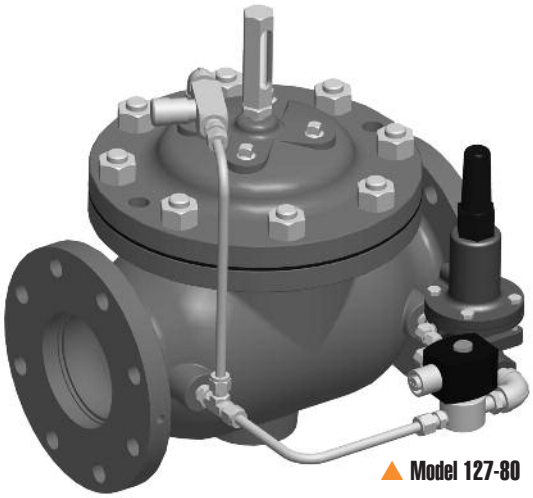

▲ Model 127-80

The Model 127-80 has a wide range of applications: anywhere pressure must be reduced to a manageable level, combined with a need for an on/off electrical operation.
Typical examples include:
▶Pump systems ▶Process pressure control ▶Truck loading terminals

SERIES FEATURES

- ▶Reduces a higher inlet pressure to a lower outlet pressure
- ▶Constant outlet pressure over wide flow range
- ▶Electrically operated solenoid allows valve to open (reduce pressure) or shut-off (close)
- ▶Pilot-operated main valve not subject to pressure fall off
- ▶Outlet pressure is adjustable with single screw
- ▶Can be maintained without removal from the line
- ▶Adjustable opening/response speed
- ▶Factory tested and can be pre-set to your requirements

OPERATION

A two-way solenoid acts as an override and when closed, causes the main valve to close. Opening the solenoid allows the spring loaded, normally open pilot, sensing downstream pressure to respond to changes in pressure and causes the main valve to do the same. The net result is a constant modulating action of the pilot and main valve to hold the downstream pressure constant. The pilot system is equipped with an opening speed control that fine tunes the valve's response to the system variables.

The solenoid can be supplied normally closed (energize to enable) or normally open (energize to close).

COMPONENTS

The Model 127-80 consists of the following components, arranged as shown on the schematic diagram:

1.) **Model 65 Basic Control Valve** (Fail Closed)
2.) **Model 1340 Pressure Reducing Pilot**
3.) **Model 451 Two-Way Solenoid Pilot**
4.) **Model 126 Ejector**
5.) **Model 141-3* Flow Control Valve** (Opening Speed Control)
*NOTE: Model 141-2 Needle Valve used on sizes 1-1/4"-3"
6.) **Model 123 Inline Strainer**
7.) **Model 155L Visual Indicator**

SCHEMATIC

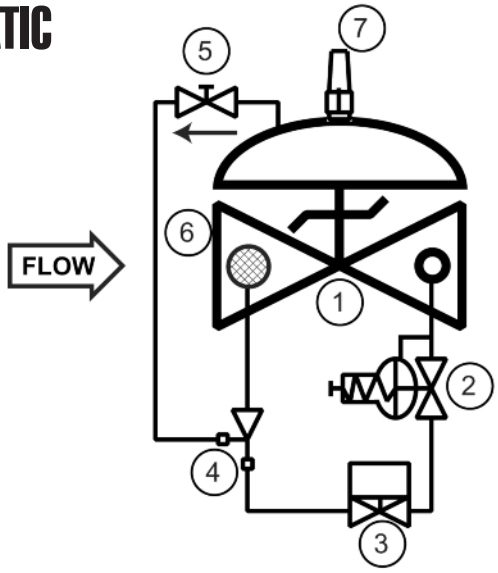

RECOMMENDED INSTALLATION

▶Install the valve with adequate space above and around the valve to facilitate servicing. Refer to the Dimension Table.
▶Valve should be installed with the bonnet (cover) at the top, particularly 8" and larger valves, and any valve with a limit switch.
▶Shut-off valves should be installed upstream and downstream of the control valve. These are used to isolate the valve during start-up and maintenance.
▶Install a pressure gauge downstream of the valve to enable adjustment to the required pressure setting. This gauge may be installed in the downstream side port of the valve body.
▶Following main valve installation, the solenoid must be wired into the user's control system. This is a simple two-wire (plus ground) connection.

SIZING

Sizing is a critical issue in the selection of pressure reducing valves. Definitive sizing information can be found in the Series 127 section of the OCV Catalog and Engineering section Performance Charts. Consult the factory for assistance.

MAX. PRESSURE

(The pressures listed here are maximum working pressures at 100°F)

END CONNECTIONS	DUCTILE IRON	STEEL/STN STL	ALUMINUM
Threaded	640 psi	640 psi	285 psi
Grooved	300 psi	300 psi	200 psi
150# Flanged	250 psi	285 psi	285 psi
300# Flanged	640 psi	740 psi	---

TOLL FREE 1.888.628.8258 ● **phone:** (918)627.1942 ● **fax:** (918)622.8916 ● 7400 East 42nd Place, Tulsa, OK 74145
email: sales@controlvalves.com ● **website:** www.controlvalves.com

Model 127-80 (Terminal Services)

SIZES GLOBE/ANGLE
Screwed Ends - 1 1/4" - 3"
Grooved Ends - 1 1/2" - 6" (globe); 1-1/2" - 6" (angle)
Flanged Ends - 1 1/4" - 24" (globe); 1 1/4" - 16" (angle)
FLUID OPERATING TEMPERATURE RANGE
(Valve Elastomers)
Buna-N -20°F to 180°F
Viton 20°F to 230°F
Fluorosilicone -40°F to 150°F
EPDM 0°F to 230°F
SPRING RANGES
(outlet setting)
5-30 psi, 20-80 psi, 20-200 psi, 100-300 psi
MATERIALS
Consult factory for others.
Body/Bonnet: Ductile Iron (epoxy coated), Carbon Steel (epoxy coated), Stainless Steel, Aluminum
Seat Ring: Stainless Steel, Bronze
Stem: Stainless Steel, Monel
Spring: Stainless Steel
Diaphragm: Buna-N, Viton, (Nylon reinforced)
Seat Disc: Buna-N, Viton
Pilot: Stainless Steel, Bronze
Other pilot system components:
Stainless Steel, Bronze/Brass
Tubing & Fittings: Stainless Steel, Copper/Brass
SOLENOID
Enclosure: Explosion Proof NEMA 4X, 6P, 7, 9
Body: Stainless Steel, Brass
Voltages: 24, 120, 240, 480 VAC
12, 24 VDC
Note: Working pressures of solenoids vary greatly, consult factory on application of OCV Model 127-80 valves.

SPECIFICATIONS (Typical Terminal Services Application)

The pressure reducing/solenoid shut-off valve shall function to reduce a higher upstream pressure to a constant, lower downstream pressure regardless of fluctuations in supply or demand. The valve shall be equipped with a two-way solenoid valve that will allow the valve to open when <energized, de-energized>.

DESIGN
The pressure reducing/solenoid shut-off valve shall be a single-seated, line pressure operated, diaphragm actuated, pilot controlled globe valve. The valve shall seal by means of a corrosion-resistant seat and a resilient, rectangular seat disc. These, and other parts, shall be replaceable without removing the valve from the line. The stem of the main valve shall be guided top and bottom by integral bushings. Alignment of the body, bonnet and diaphragm assembly shall be by precision dowel pins. The diaphragm shall not be used as a seating surface, nor shall the pistons be used as an operating means. The pilot system shall be furnished complete and installed on the main valve. It shall include an opening speed control, an inline strainer and a solenoid valve. The pressure reducing/solenoid shut-off valve shall be operationally and hydrostatically tested prior to shipment.

MATERIALS OF CONSTRUCTION
The main valve body and bonnet shall be ductile iron. All ferrous surfaces shall be coated with 4 mils of epoxy. The main valve seat ring shall be stainless steel. Elastomers (diaphragms, resilient seats and O-rings) shall be Buna-N. The control pilot shall be stainless steel. The opening speed control and control line tubing shall be stainless steel. The solenoid shall have an explosion-proof enclosure and be suitable for operation on <voltage>.

OPERATING CONDITIONS
The pressure reducing/ solenoid shut-off valve shall be suitable for reducing inlet pressures of <X to X> psi to a constant outlet pressure of <X> psi at flow rates ranging from <X to X> gpm.

ACCEPTABLE PRODUCTS
The pressure reducing/ solenoid shut-off valve shall be a <size> Model 127-80, <globe pattern, angle pattern>, with <150# flanged, 300# flanged, threaded, grooved> end connections, as manufactured by OCV Control Valves, Tulsa, Oklahoma, USA.

U.S. DIMENSIONS - INCHES

DIM	END CONN.	1 1/4-1 1/2	2	2 1/2	3	4	6	8	10	12	14	16	24
	SCREWED	8 3/4	9 7/8	10 1/2	13	--	--	--	--	--	--	--	--
A	GROOVED	8 3/4	9 7/8	10 1/2	13	15 1/4	20	--	--	--	--	--	--
	150# FLGD	8 1/2	9 3/8	10 1/2	12	15	17 3/4	25 3/8	29 3/4	34	39	40 3/8	62
	300# FLGD	8 3/4	9 7/8	11 1/8	12 3/4	15 5/8	18 5/8	26 3/8	31 1/8	35 1/2	40 1/2	42	63 3/4
	SCREWED	4 3/8	4 3/4	6	6 1/2	--	--	--	--	--	--	--	--
C	GROOVED	4 3/8*	4 3/4	6	6 1/2	7 5/8	--	--	--	--	--	--	--
ANGLE	150# FLGD	4 1/4	4 3/4	6	6	7 1/2	10	12 11/16	14 7/8	17	--	20 13/16	--
	300# FLGD	4 3/8	5	6 3/8	6 3/8	7 13/16	10 1/2	13 3/16	15 9/16	17 3/4	--	21 5/8	--
	SCREWED	3 1/8	3 7/8	4	4 1/2	--	--	--	--	--	--	--	--
D	GROOVED	3 1/8*	3 7/8	4	4 1/2	5 5/8	--	--	--	--	--	--	--
ANGLE	150# FLGD	3	3 7/8	4	4	5 1/2	6	8	11 3/8	11	--	15 11/16	--
	300# FLGD	3 1/8	4 1/8	4 3/8	4 3/8	5 13/16	6 1/2	8 1/2	12 1/16	11 3/4	--	16 1/2	--
E	ALL	6	6	7	6 1/2	8	10	11 7/8	15 3/8	17	18	19	27
F (OPT)	ALL	3 7/8	3 7/8	3 7/8	3 7/8	3 7/8	3 7/8	6 3/8	6 3/8	6 3/8	6 3/8	6 3/8	8
H	ALL	10	11	11	11	12	13	14	17	18	20	20	28 1/2

*GROOVED END NOT AVAILABLE IN 1 1/4"

For maximum efficiency, the OCV control valve should be mounted in a piping system so that the valve bonnet (cover) is in the top position. Other positions are acceptable but may not allow the valve to function to its fullest and safest potential. In particular, please consult the factory before installing 8" and larger valves, or any valves with a limit switch, in positions other than described. Space should be taken into consideration when mounting valves and their pilot systems.

A routine inspection & maintenance program should be established and conducted yearly by a qualified technician. Consult our factory @ **1-888-628-8258** for parts and service.

How to order your Model 127-80 valve
When ordering please provide:
Fluid to be controlled - Model Number - Size - Globe or Angle - End Connection - Body Material -Trim Material - Pilot Options - Pressure Setting or Spring Range - Solenoid Voltage - Energize to Open or Close Valve - Special Requirements / Installation Requirements

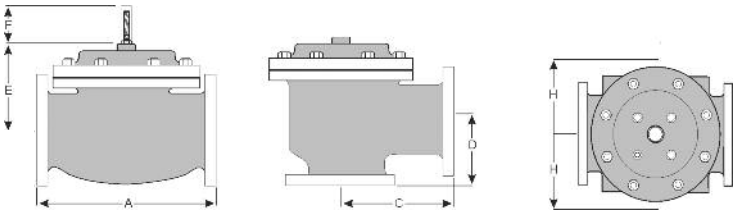

QUALITY SYSTEM REGISTERED TO ISO 9001

Represented by:

TOLL FREE 1.888.628.8258 • **phone:** (918)627.1942 • **fax:** (918)622.8916 • 7400 East 42nd Place, Tulsa, Oklahoma 74145
email: sales@controlvalves.com • **website:** www.controlvalves.com