Pressure Relief Valve Series 108

▲Model 108-2 shown

In many liquid piping systems, it is vital that line pressure is maintained within relatively narrow limits. This is the function of the 108 Pressure Relief / Back Pressure Series of the OCV control valves.

Installed in the main flow line, the standard Model 108-2 acts as a backpressure or pressure sustaining valve. In this configuration, the valve maintains a constant upstream pressure regardless of fluctuating downstream demand. When used in a bypass line, the same model will function as a relief valve, protecting the system against potentially damaging surges.

SERIES FEATURES

- Relief: Maintains a constant inlet pressure by relieving excess high pressure.
- Sustaining: Prevents pressure from dropping below a minimum.
- Inlet pressure is accurate over a wide range of flow.
- Inlet pressure is adjustable with a complete range of control springs.
- Quick opening with controlled closing.

VALVE FEATURES

- Operates automatically off line pressure.
- Heavy-duty, nylon-reinforced diaphragm.
- Rectangular-shaped, soft seat seal provides drip-tight Class VI closure.
- Diaphragm assembly Guided top and bottom.
- Throttling seat retainer for flow and pressure stability.
- Easily maintained without removal from the line.
- Replaceable seat ring.
- Alignment pins assure proper reassembly after maintenance.
- Valves are factory tested.
- Valves are serial numbered and registered to facilitate replacement parts and factory support.

SURGE / RELIEF

Protects system from over-pressure by exhausting excess pressure.
The valve may only have to operate intermittently to prevent pressure surges that might occur on pump start, pump stop, or sudden downstream valve closure.

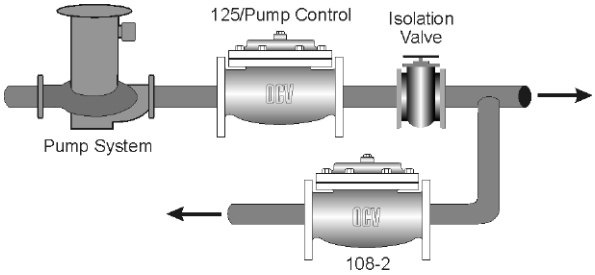

BYPASS PRESSURE CONTROL

Valve keeps pumping system at a constant pressure by bypassing back to source. Provides accurate pressure control when system demand varies widely.

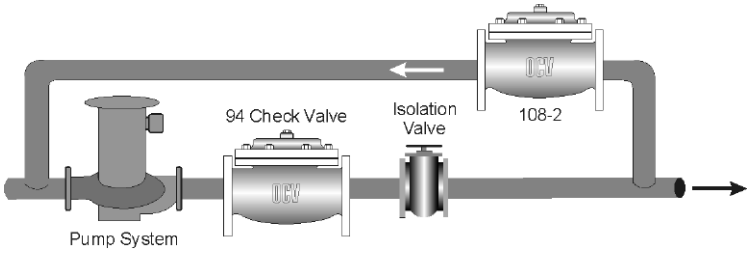

BACK PRESSURE / SUSTAINING

Valve allows flow when inlet pressure is above the set-point thus preventing inlet pressure from falling too low. Prevents demand from "robbing" the source, or keeps pump "on its curve."

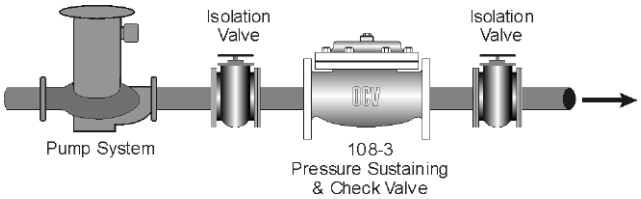

TOLL FREE 1.888.628.8258 • **phone:** (918)627.1942 • **fax:** (918)622.8916 • 7400 East 42nd Place, Tulsa, OK 74145
email: sales@controlvalves.com • **website:** www.controlvalves.com

REVISED: 03/09/16

Pressure Relief Valve Series 108

VALVE OPERATION

- Relief Valve - Closed under normal operating pressures. Valve opens when pressure rises to the set point. Valve will close when system pressure drops below set point.
- Bypass Pressure Control Valve - Opens and modulates to maintain the required pressure.
- Backpressure / Sustaining Valve- Open under normal conditions and closes as upstream pressure falls below set point.

The Model 108-2 consists of the following components, arranged as shown on the schematic diagram:
1.) Model 65 Basic Control Valve, a hydraulically-operated, diaphragm-actuated, globe or angle valve which closes with an elastomer-on-metal seal.

2.) Model 1330 Pressure Relief Pilot, a two-way, normally-closed pilot valve which senses upstream pressure under its diaphragm and balances it against an adjustable spring load. An increase in upstream pressure tends to make the pilot open.

3.) Model 126 Ejector, a simple "tee" fitting with a fixed orifice in its inlet port. It provides the proper pressure to the diaphragm chamber of the main valve depending on the position of the pressure relief pilot.

4.) Model 141-3 Flow Control Valve, a needle-type valve which provides adjustable, restricted flow in one direction, and free flow in the opposite direction. On the 108-2, the flow control valve is connected as a **closing speed control.**

5.) Model 159 Y-Strainer (standard on water service valves) or **Model 123 Inline Strainer** (standard on fuel service valves). The strainer protects the pilot system from solid contaminants in the line fluid.

6A / 6B.) Two Model 141-4 Ball Valves (standard on water service valves, optional on fuel service valves), useful for isolating the pilot system for maintenance or troubleshooting.

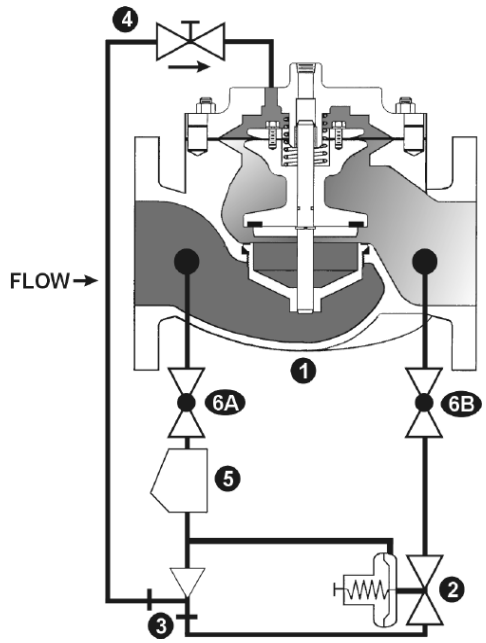

PILOT
1330
2400

- Accurate sensing of inlet pressure.
- Simple, single adjustment.
- All parts replaceable while mounted on valve.
- Rubber-to-metal seat for positive shut-off.
- Large area diaphragm for quick, precise throttling.
- Visual indication of diaphragm condition.
- Bronze and stainless steel construction.

1330

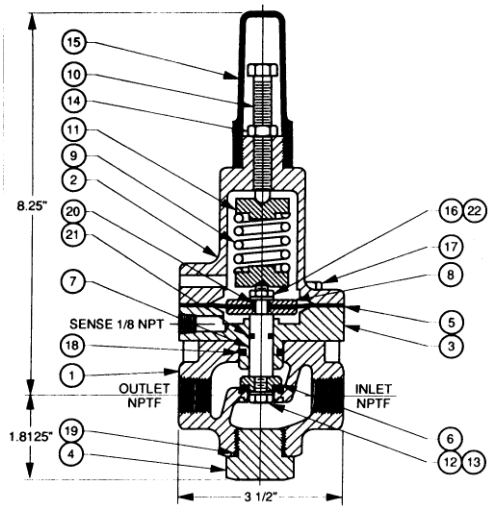

Pilot Materials
Low-Lead Bronze
Stainless Steel
Spring Ranges
5-30, 20-80, 20-200, 100-300 psi

2400

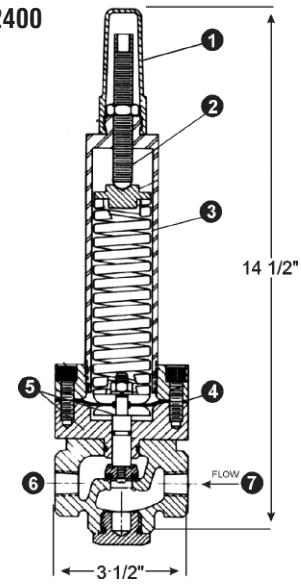

Pilot Materials
Stainless Steel
Spring Ranges
200-750 psi

The Model 1330/2400 Pressure Sustaining Pilot controls the amount of pressure in the upper chamber of the Main valve(s). (Hence, the degree of opening or closing of the Main valve). The upstream pressure increases, the pilot begins to open, decreasing the amount of pressure in the upper chamber of the main valve allowing it to open a proportionate amount, in order to maintain a constant inlet pressure. As the upstream pressure decreases, the pilot begins to close, allowing the pressure in the upper chamber of the main valve to increase causing it to close. This is a constant modulating action compensating for any change in upstream pressure.

MODEL 1330 / 2400
Pressure Relief Pilot

1. Adjusting Screw Cover
2. Adjusting Screw
3. Spring
4. Diaphragm
5. Pressure Sense
6. Pilot Outlet
7. Pilot Inlet

TOLL FREE 1.888.628.8258 • **phone:** (918)627.1942 • **fax:** (918)622.8916 • 7400 East 42nd Place, Tulsa, Oklahoma 74145
email: sales@controlvalves.com • **website:** www.controlvalves.com

SIZING CONSIDERATIONS

For the most comprehensive procedure in sizing Series 108 control valves, it is best to use our ValveMaster software or the guidelines shown here in conjunction with the Performance Charts in the Engineering Section of the OCV catalog.

SURGE RELIEF

Size is determined by the amount of flow required to lower the inlet pressure. This relief flow can be difficult to determine, so a general guideline is to use 60% of the rated pump flow. The 108 Series valve is capable of intermittent flows up to 45 ft. per second. Relief valve sizes are typically 50-60% of the mainline size.

BYPASS PRESSURE CONTROL

Bypass pressure control valves are sized based on maximum flow and pressure drop across the valve. The maximum flow through the valve is the pump flow at the desired set point (from the pump curve) minus the minimum system flow. The pressure drop across the valve is the set point minus the pressure at the valve discharge (typically pump suction or storage tank head). Determine the valve's operating Cv using the maximum flow and pressure drop from the formula:

$$C_v = \frac{Q_{max}}{\sqrt{\frac{DP}{sg}}}$$

where Qmax = maximum flow rate, gallons per minute
DP = pressure drop, psi
sg = liquid specific gravity (water = 1.00)

From the chart below, pick the smallest valve that has at least the Cv determined above, and where the velocity does not exceed 25 ft/sec.

PRESSURE SUSTAINING

Sustaining valves are typically main line size. However, maximum velocity through the valve should not exceed 25 ft/sec.

Flow chart for full port valve

Valve Size	1 1/4	1 1/2	2	2 1/2	3	4	6	8	10	12	14	16	24
GLOBE Cv	23	27	47	68	120	200	450	760	1,250	1,940	2,200	2,850	6900
ANGLE Cv	30	35	65	87	160	270	550	1,000	1,600	2,400	—	4,000	—
FLOW @ 25 ft/sec	115	160	260	375	575	1,000	2,250	3,900	6,125	8,750	10,600	13,750	31,250
FLOW @ 45 ft/sec	210	280	460	650	1,000	1,800	4,000	7,000	11,000	16,000	19,000	25,000	56,000

CAVITATION CONCERNS

Many surge relief, and some bypass pressure control valves are, by their application, subject to pressure differentials that may induce cavitation. When these conditions exist, it may be only on an intermittent basis, causing minimum concern for valve deterioration.
This complex phenomenon cannot be predicted by charts, which index only inlet and outlet pressures. The easiest way to predict cavitation is to let us do the calculation.
Simply fax, e-mail or call us and we will provide a graphical analysis and a solution.
Provide us:

- APPLICATION (e.g., surge relief, bypass pressure control)
- VALVE SIZE
- PRESSURE-INLET and OUTLET
- FLOW RANGE-Minimum and Maximum
- FLUID TYPE
- FLUID VAPOR PRESSURE (if other than water)

VALVE SELECTION GUIDE

By combining various control pilots, multiple valve functions can be performed on a single Series 108 Pressure Relief Valve. To find the combination function valve, select the desired features and then the model number.
This chart shows only a sample of those most often specified valves. Consult the factory for specific data on the model you selected.

Combination valves can often reduce or eliminate other equipment. Example: If the system requires a Back Pressure Valve and a Check Valve, the check feature can be added as a function of the Back Pressure, Model 108-3.

Feature	108-2	108-3	108-4	108-34	108FC	108-8	Definition
Pressure Relief (bypass)	X	X	X	X	X	X	Limit system pressure to predetermined max.
Pressure Sustaining	X	X	X	X			Maintains minimum valve inlet pressure
Solenoid Shutoff			X	X			Opens and closes valve electrically
Check Feature		X		X			Closes valve on pressure reversal
UL / FM Approved (fire pump relief)					X		Underwriter laboratories listed / Factory Mutual approved
Air Release / Vacuum Breaker						X	Valve is open to relieve air / opens to prevent vacuum

HIGH PRESSURE / HP
When valve inlet pressure requires the model 2400 High Pressure Relief pilot, an HP is added to the end of the model number. Example: Standard model 108-2 (inlet ranges from 5 - 300 psi) Model 108-2HP (outlet ranges 200-750 psi)

Surge Anticipation refer to series 118

OCV Control Valves was founded more than 60 years ago with a vision and commitment to quality and reliability. From modest beginnings, the company has grown to be a global leader just a half century later. In fact, OCV Valves can be found in some capacity in nearly every country around the world from fire protection systems in Malaysia to aircraft fueling systems in Africa and from oil refineries in Russia to water supply systems in the USA and Canada. You will also find our valves in irrigation systems in Europe, South America and the Middle East.

The original foundation on which the company was built allows our team of professionals to not only provide the service required to be a worldwide supplier, but more importantly the opportunity to afford the personal touch necessary to be each of our customers' best partner. Simply stated, we take pride in all that we do.

Committed to the work they do, our employees average over 15 years of service. This wealth of knowledge allows us to provide quality engineering, expert support, exacting control and the know-how to create valves known for their long life.

Being ISO 9001 certified means we are committed to a quality assurance program. Our policy is to supply each customer with consistent quality products and ensure that the process is right every time. Our valves meet and exceed industry standards around the world. Including approvals by:

All valves are not created equal. OCV Control Valves proves that day in and day out.
We stand behind our valves and are ready to serve your needs.

QUALITY SYSTEM REGISTERED TO ISO 9001 · UL · FM APPROVED · CE · NSF Certified to NSF/ANSI 61-G & 372 · ABS TYPE APPROVED PRODUCT

Check individual models for availability.

TOLL FREE 1.888.628.8258 • **phone:** (918)627.1942 • **fax:** (918)622.8916 • 7400 East 42nd Place, Tulsa, OK 74145
email: sales@controlvalves.com • **website:** www.controlvalves.com

SPECIFICATIONS

NSF Certified to NSF/ANSI 61-G & 372

NOTE: ALL waterworks valves meet the Low-Lead laws of the United States, including individual state laws, as of March 2014.
**Valves 1-1/4" through 24" are certified to NSF/ANSI 372. Valves 4" through 24" are also certified to NSF/ANSI 61-G.*

VALVE BODY & BONNET	DUCTILE IRON		CAST STEEL		STAINLESS STEEL	
Material Specification	ASTM A536/65-45-12 (epoxy coated)		ASTM A216/WCB (epoxy coated)		ALL GRADES	
END CONNECTIONS						
Flange Standard (also available in metric)	ANSI B16.42		ANSI B16.5		ANSI B16.5	
Flange Class	150#	300#	150#	300#	150#	300#
Flange Face	Flat	Raised	Raised	Raised	Raised	Raised
Maximum Working Pressure	250 psi	640 psi	285 psi	740 psi	285 psi	740 psi
Screwed Working Pressure: ANSI B1.20.1 640 psi			Grooved End Working Pressure: 300 psi			
INTERNALS						
Stem	STAINLESS STEEL					
Spring	STAINLESS STEEL					
Spool	DUCTILE IRON (epoxy coated) / OPTIONAL - STN. STL.				STAINLESS STEEL	
Seat Disc Retainer	DUCTILE IRON (epoxy coated) (10" & LARGER) STN. STL. (8" & SMALLER / OPTIONAL - ALL SIZES)				STAINLESS STEEL	
Diaphragm Plate	DUCTILE IRON (epoxy coated) / OPTIONAL - STN. STL.				STAINLESS STEEL	
Seat Ring (Trim)	LOW-LEAD BRONZE OR STN. STL.				STN. STL.	
Upper Stem Bushing	BRONZE OR TEFLON®				TEFLON®	
Lower Stem Bushing	NOT APPLICABLE FOR LOW-LEAD BROZE SEAT RINGS / TEFLON FOR FOR STN. STL. SEAT RINGS					
ELASTOMER PARTS (Rubber)						
Diaphragm/Seat Disc/O-Rings	EPDM					
Operating Temperature* *Consult factory when temperatures approach low or high temperature allowance.	32°F to 230°F					
COATINGS	NSF-61 EPOXY COATING					
ELECTRICAL SOLENOIDS						
Bodies	BRASS / OPTIONAL - STAINLESS STEEL					
Enclosures	WATER TIGHT, NEMA 1, 3, 4, & 4X					
Power	AC, 60HZ - 24, 120, 240, 480 VOLTS		AC, 50HZ - In 110 VOLT MULTIPLES		DC, 6 12, 24, 240 VOLTS	
Operation	ENERGIZE TO OPEN (NORMALLY CLOSED)		DE-ENERGIZE TO OPEN (NORMALLY OPEN)			

CONTROL PILOTS		
Bodies	LOW-LEAD BRONZE	STN. STL.
Internal	STAINLESS STEEL	STAINLESS STEEL
Tubing	COPPER	STAINLESS STEEL
Fittings	LOW-LEAD BRASS	STAINLESS STEEL

TEFLON® is a registered trademark of DuPont.

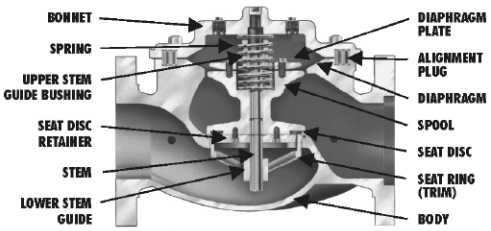

Globe Flanged Sizes

1.25"	1.5"	2"	2.5"	3"	4"	6"	8"	10"	12"	14"	16"	18"*	20"*	24"
32mm	40mm	50mm	65mm	80mm	100mm	150mm	200mm	250mm	300mm	350mm	400mm	450mm*	500mm*	600mm

*CONSULT FACTORY

Angle Flanged Sizes

1.25"	1.5"	2"	2.5"	3"	4"	6"	8"	10"	12"	16"
32mm	40mm	50mm	65mm	80mm	100mm	150mm	200mm	250mm	300mm	400mm

Globe/Angle Screwed Sizes

1.25"	1.5"	2"	2.5"	3"
32mm	40mm	50mm	65mm	80mm

Globe/Angle Grooved Sizes

1.5"	2"	2.5"	3"	4"	6"*
32mm	50mm	65mm	80mm	100mm	150mm*

*GLOBE ONLY

TOLL FREE 1.888.628.8258 • **phone:** (918)627.1942 • **fax:** (918)622.8916 • 7400 East 42nd Place, Tulsa, OK 74145
email: sales@controlvalves.com • **website:** www.controlvalves.com

DIMENSIONS

U.S. DIMENSIONS - INCHES

DIM	END CONN.	1 1/4-1 1/2	2	2 1/2	3	4	6	8	10	12	14	16	24
	SCREWED	8 3/4	9 7/8	10 1/2	13	--	--	--	--	--	--	--	--
A	GROOVED	8 3/4	9 7/8	10 1/2	13	15 1/4	20	--	--	--	--	--	--
	150# FLGD	8 1/2	9 3/8	10 1/2	12	15	17 3/4	25 3/8	29 3/4	34	39	40 3/8	62
	300# FLGD	8 3/4	9 7/8	11 1/8	12 3/4	15 5/8	18 5/8	26 3/8	31 1/8	35 1/2	40 1/2	42	63 3/4
	SCREWED	1 7/16	1 11/16	1 7/8	2 1/4	--	--	--	--	--	--	--	--
B	GROOVED	1*	1 3/16	1 7/16	1 3/4	2 1/4	3 5/16	--	--	--	--	--	--
	150# FLGD	2 5/16-2 1/2	3	3 1/2	3 3/4	4 1/2	5 1/2	6 3/4	8	9 1/2	10 5/8	11 3/4	16
	300# FLGD	2 5/8-3 1/16	3 1/4	3 3/4	4 1/8	5	6 1/4	7 1/2	8 3/4	10 1/4	11 1/2	12 3/4	18
	SCREWED	4 3/8	4 3/4	6	6 1/2	--	--	--	--	--	--	--	--
C	GROOVED	4 3/8*	4 3/4	6	6 1/2	7 5/8	--	--	--	--	--	--	--
ANGLE	150# FLGD	4 1/4	4 3/4	6	6	7 1/2	10	12 11/16	14 7/8	17	--	20 13/16	--
	300# FLGD	4 3/8	5	6 3/8	6 3/8	7 13/16	10 1/2	13 3/16	15 9/16	17 3/4	--	21 5/8	--
	SCREWED	3 1/8	3 7/8	4	4 1/2	--	--	--	--	--	--	--	--
D	GROOVED	3 1/8*	3 7/8	4	4 1/2	5 5/8	--	--	--	--	--	--	--
ANGLE	150# FLGD	3	3 7/8	4	4	5 1/2	6	8	11 3/8	11	--	15 11/16	--
	300# FLGD	3 1/8	4 1/8	4 3/8	4 3/8	5 13/16	6 1/2	8 1/2	12 1/16	11 3/4	--	16 1/2	--
E	ALL	6	6	7	6 1/2	8	10	11 7/8	15 3/8	17	18	19	27
F	ALL	3 7/8	3 7/8	3 7/8	3 7/8	3 7/8	3 7/8	6 3/8	6 3/8	6 3/8	6 3/8	6 3/8	8
G	ALL	6	6 3/4	7 11/16	8 3/4	11 3/4	14	21	24 1/2	28	31 1/4	34 1/2	52
H	ALL	10	11	11	11	12	13	14	17	18	20	20	28 1/2

*GROOVED END NOT AVAILABLE IN 1 1/4"

METRIC DIMENSIONS - M.M.

DIM	END CONN.	DN32-DN40	DN50	DN65	DN80	DN100	DN150	DN200	DN250	DN300	DN350	DN400	DN600
	SCREWED	222	251	267	330	--	--	--	--	--	--	--	--
A	GROOVED	222	251	267	330	387	508	--	--	--	--	--	--
	150# FLGD	216	238	267	305	381	451	645	756	864	991	1026	1575
	300# FLGD	222	251	283	324	397	473	670	791	902	1029	1067	1619
	SCREWED	37	43	48	57	--	--	--	--	--	--	--	--
B	GROOVED	25*	30	37	44	57	84	--	--	--	--	--	--
	150# FLGD	59-64	76	89	95	114	140	171	203	241	270	298	406
	300# FLGD	67-78	83	95	105	127	159	191	222	260	292	324	457
	SCREWED	111	121	152	165	--	--	--	--	--	--	--	--
C	GROOVED	111*	121	152	165	194	--	--	--	--	--	--	--
ANGLE	150# FLGD	108	121	152	152	191	254	322	378	432	--	529	--
	300# FLGD	111	127	162	162	198	267	335	395	451	--	549	--
	SCREWED	79	98	102	114	--	--	--	--	--	--	--	--
D	GROOVED	79*	98	102	114	143	--	--	--	--	--	--	--
ANGLE	150# FLGD	76	98	102	102	140	152	203	289	279	--	398	--
	300# FLGD	79	105	111	111	148	165	216	306	298	--	419	--
E	ALL	152	152	178	165	203	254	302	391	432	457	483	686
F	ALL	98	98	98	98	98	98	162	162	162	162	162	203
G	ALL	152	171	195	222	298	356	533	622	711	794	876	1321
H	ALL	254	279	279	279	305	330	356	432	457	508	508	724

*GROOVED END NOT AVAILABLE IN DN32

For maximum efficiency, the OCV control valve should be mounted in a piping system so that the valve bonnet (cover) is in the top position. Other positions are acceptable but may not allow the valve to function to its fullest and safest potential. In particular, please consult the factory before installing 8" and larger valves, or any valves with a limit switch, in positions other than described. Space should be taken into consideration when mounting valves and their pilot systems.

A routine inspection & maintenance program should be established and conducted yearly by a qualified technician. Consult our factory @ **1-888-628-8258** for parts and service.

How to order your valve
When Ordering please provide:
Series Number - Valve size - Globe or Angle - Pressure Class - Screwed, Flanged, Grooved - Trim Material - Adjustment Range - Pilot Options - Special needs / or installation requirements.

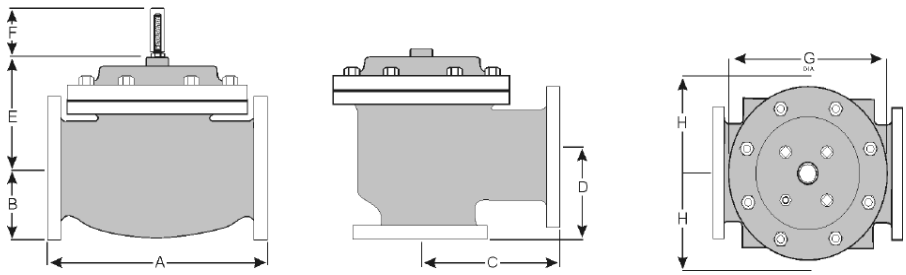

Represented by:

TOLL FREE 1.888.628.8258 • **phone:** (918)627.1942 • **fax:** (918)622.8916 • 7400 East 42nd Place, Tulsa, OK 74145
email: sales@controlvalves.com • **website:** www.controlvalves.com