OCV Control Valves
Registered to ISO 9001
Global performance. Personal touch.

Part Number: 964093 - Buna

2 ½ - 3" BASIC VALVE

Repair Parts Kit-Buna

Part Number: 964093
For: 2 ½ - 3" Basic Valve

Parts List

ITEM	INCLUDED	PART#	QTY	DESCRIPTION	MATERIAL
1		690023	1	DIAPHRAGM	Nylon, Buna-N
2		611012	1	STEM 'O' RING	Viton
3		690517	1	SEAT DISC	Buna-N
4		610042	1	SEAT 'O' RING	Buna-N

7400 E. 42nd Place, Tulsa, OK 74145-4744 USA • fax: (918) 622.8916 • email: sales@controlvalves.com
1.888.OCV.VALV (628.8258) • www.controlvalves.com

OCV Control Valves
Registered to ISO 9001
Global performance. Personal touch.

Part Number: 964093 - Buna

2 ½ - 3" BASIC VALVE

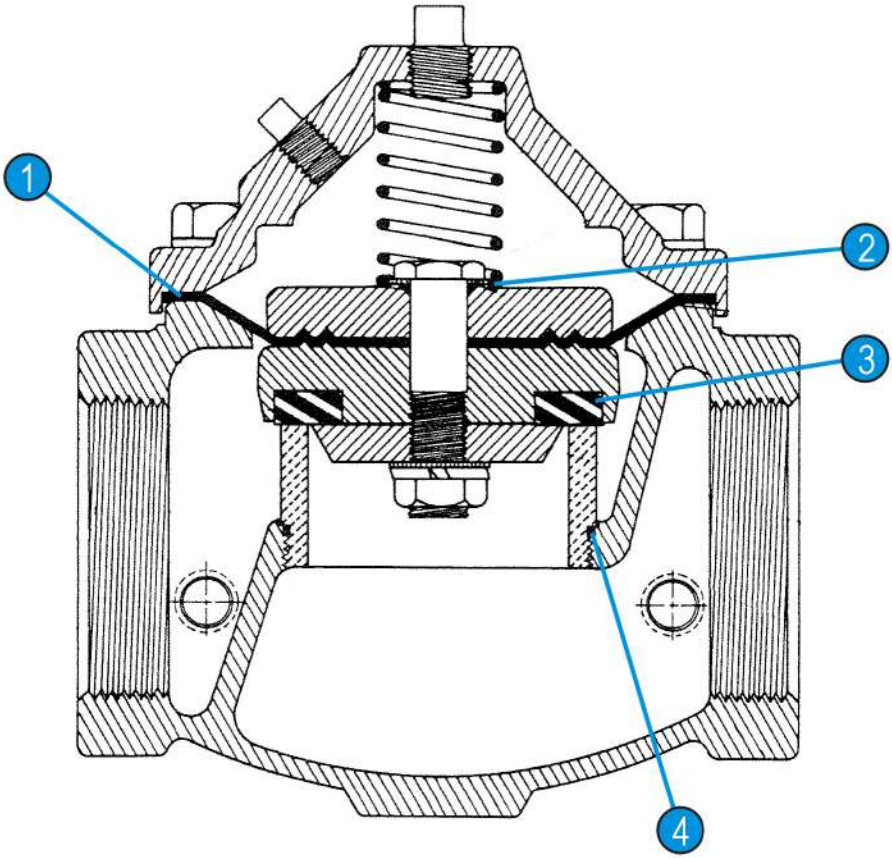

ITEM	PART#	QTY	DESCRIPTION	MATERIAL
1	690023	1	DIAPHRAGM	Nylon, Buna-N
2	611012	1	STEM 'O' RING	Viton
3	690517	1	SEAT DISC	Buna-N
4	610042	1	SEAT 'O' RING	Buna-N

7400 E. 42nd Place, Tulsa, OK 74145-4744 USA • fax: (918) 622.8916 • email: sales@controlvalves.com
1.888.OCV.VALV (628.8258) • www.controlvalves.com