OCV Control Valves
Registered to ISO 9001
Global performance. Personal touch.

Part Number: 935004 - Buna

3300 OVERHAUL KIT

Repair Parts Kit-Buna

Part Number: 935004

For: 3300 Overhaul Kit

Parts List

Item	Included	Part #	Quantity	Description	Material
1		610017	1	'O' RING	Buna-N
2		530701	8	LOWER BLOCK CAP SCREWS	S.S.
3		694001	1	DIAPHRAGM	Buna-N
4		531725	12	DIAPHRAGM CASE CAP SCREWS	S.S.
5		590725	12	DIAPHRAGM CASE NUTS	S.S.
6		310702	1	SEAT RETAINER	S.S.
7		611111	1	'O' RING	Viton
8		310724	1	SEAT	S.S.
9		300211	1	STEM BUSHING	Brass
10		314701	1	STEM	S.S.
11		611010	3	'O' RING	Viton
12		630708	1	SNAP RING	S.S.
13		610218	1	'O' RING	Buna-N
14		610117	1	'O' RING	Buna-N
15		611113	1	'O' RING	Viton
16		611112	2	'O' RING	Viton
17		694500	1	SEAT DISC	Buna-N

7400 E. 42nd Place, Tulsa, OK 74145-4744 USA • fax: (918) 622.8916 • email: sales@controlvalves.com
1.888.OCV.VALV (628.8258) • www.controlvalves.com

OCV Control Valves
Registered to ISO 9001
Global performance. Personal touch.

Part Number: 935004 - Buna

3300 OVERHAUL KIT

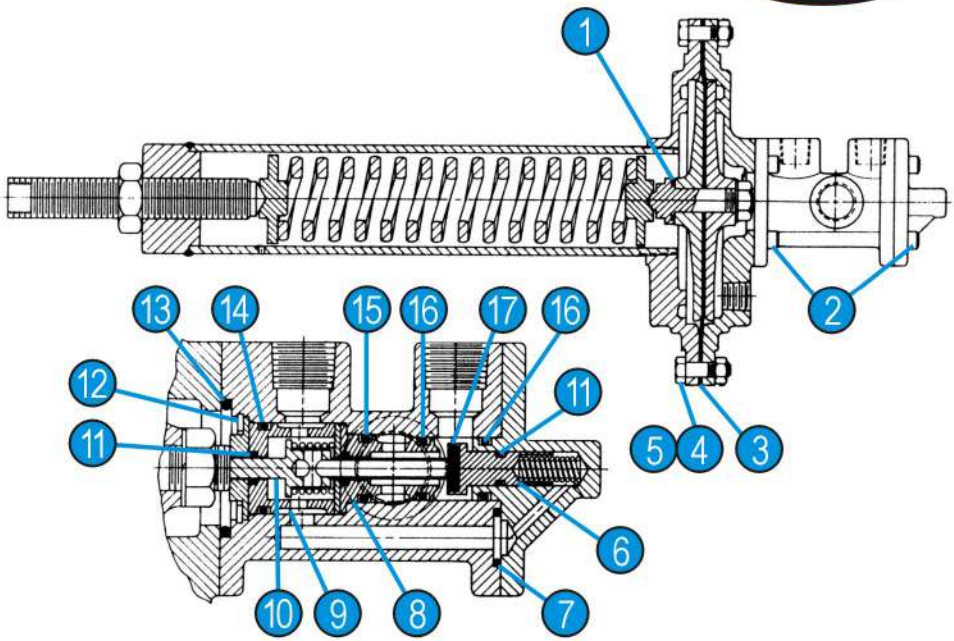

Item	Part #	Quantity	Description	Material
1	610017	1	'O' RING	Buna-N
2	530701	8	LOWER BLOCK CAP SCREWS	S.S.
3	694001	1	DIAPHRAGM	Buna-N
4	531725	12	DIAPHRAGM CASE CAP SCREWS	S.S.
5	590725	12	DIAPHRAGM CASE NUTS	S.S.
6	310702	1	SEAT RETAINER	S.S.
7	611111	1	'O' RING	Viton
8	310724	1	SEAT	S.S.
9	300211	1	STEM BUSHING	Brass
10	314701	1	STEM	S.S.
11	611010	3	'O' RING	Viton
12	630708	1	SNAP RING	S.S.
13	610218	1	'O' RING	Buna-N
14	610117	1	'O' RING	Buna-N
15	611113	1	'O' RING	Viton
16	611112	2	'O' RING	Viton
17	694500	1	SEAT DISC	Buna-N

7400 E. 42nd Place, Tulsa, OK 74145-4744 USA • fax: (918) 622.8916 • email: sales@controlvalves.com
1.888.OCV.VALV (628.8258) • www.controlvalves.com