DESCRIPTION

MODEL 328 FLOW LIMITER

The Model 328 Flow Limiter is a device that enables the user to limit the extent of opening of the valve. It consists of a housing threaded into the center port of the valve bonnet or one of the four bonnet ports, a sealed limiting rod, and an adjusting screw. It may be installed on virtually any OCV control valve, and can be done so without any disassembly of the valve itself

WHERE USED

The Model 328 is primarily used on on/off valves where it might be necessary to reduce the flow rate below that of a full open valve, e.g. solenoid valves supplying a limited capacity such as spray nozzles. The Model 328 is a limiting device only and should not be used in lieu of a modulating control such as Rate of Flow, Pressure Sustaining etc.

NOTE: The Model 328 is limited to 12" and smaller valves.

MODEL 328 MATRIX

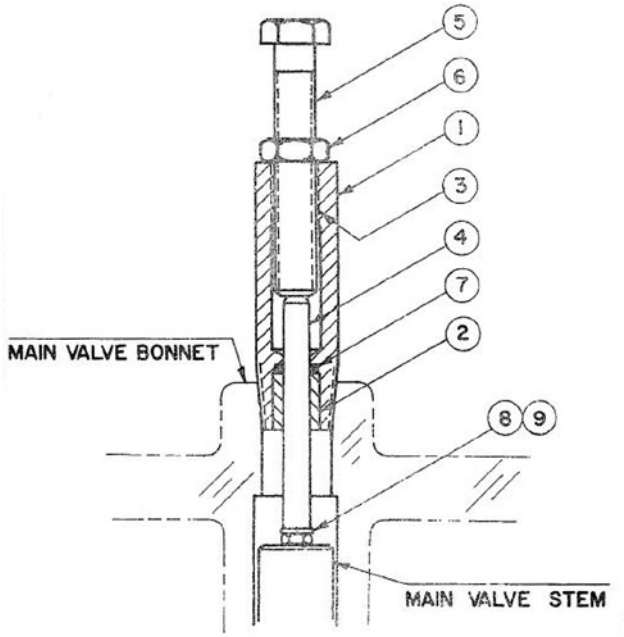

ITEM #	DESCRIPTION	MATERIAL
1	HOUSING	STN. STL.
2	BUSHING	BRONZE
3	HELICOIL	STN. STL.
4	LIMITING ROD	STN. STL.
5	ADJ. SCREW	STN. STL.
6	LOCK NUT	STN. STL.
7	O-RING	BUNA-N
8	LOCK WASHER	STN. STL.
9	SHOCK NUT	BRASS

VALVE SIZE	PART NUMBER	-A- DIMENSION
2"	200710	4.38"
2 1/2" - 3"	200712	4.38"
4"	200716	5.88"
6"	200733	7.25"
8"	200735	9.25"
10"	200736	9.25"
12"	200738 (2 required)	9.25"

NOTE: Maximum pressure may vary with application. Consult factory.

SCHEMATIC SYMBOL

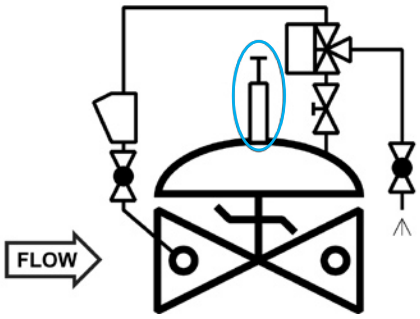

EXAMPLE: Shown here on a Model 115-1 Solenoid Valve

The Model 328 shown on OCV Valve Schematic as:

ADJUSTING PROCEDURE

The adjusting screw may be adjusted counterclockwise to allow greater opening while the valve is under pressure. Do NOT attempt to adjust clockwise while valve is under pressure.

TOLL FREE 1.888.628.8258 • **phone:** (918)627.1942 • **fax:** (918)622.8916 • 7400 East 42nd Place, Tulsa, OK 74145
email: sales@controlvalves.com • **website:** www.controlvalves.com