DELUGE PRESSURE REDUCING MODEL 68 DE\EL\HRV\PR

DE\EL\HRV\PR

Electrically or Hydraulically Actuated, Anti-Columning, Pressure Reducing Deluge Valve

Electrically or hydraulically, pilot controlled deluge/pre-action valve, actuated by the pipeline pressure. The valve is closed in its normal, set position and opens when the hydraulic pressure drops in a water pressurized pilot line, releasing a hydraulic relay, or by an electric command. When tripped, the valve regulates to a steady, preset downstream pressure, regardless of upstream pressure or flow rate fluctuations. An emergency manual release valve is fitted as standard.

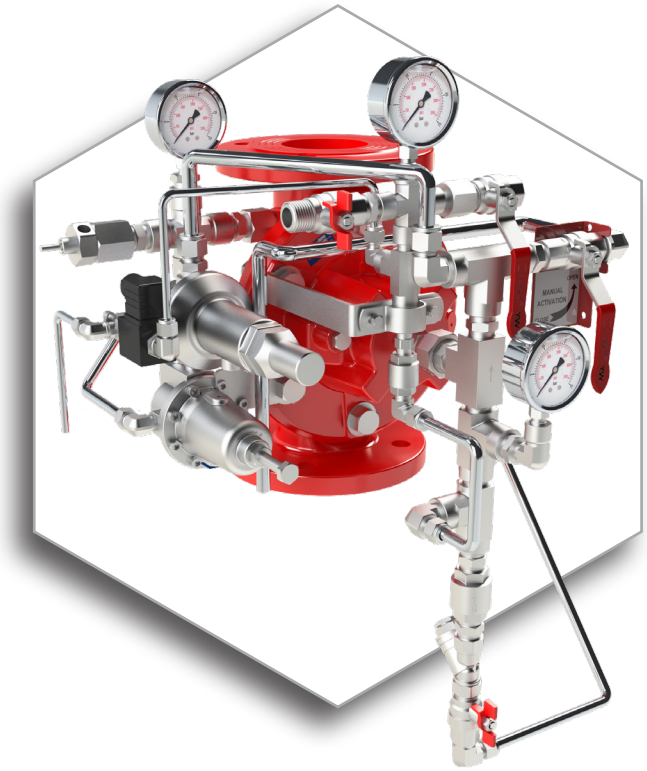

* General representation of valve

CERTIFICATION & COMPLIANCE

- ANSI FCI 70-2 Class VI seat leakage class
- UL listed under VLFT category
- Fire tested to EN ISO 6182-5:2006 (2"- 6" only)
- Lloyd's & ABS approvals

FEATURES & BENEFITS

- High pressure (PN25/375 psi), high flow deluge systems
- Automatic or manual emergency actuation
- Hazardous, flammable & explosive classified area fire suppression
- Superior design featuring exceptionally low pressure losses at high flow rates
- Low lifelong maintenance costs due to straightforward design
- Applicable for water, seawater, & foam
- Out of box fully assembled & tested valves
- Factory trimmed for vertical or horizontal installations without modification
- Extensive valve & trim materials selection & corrosion protection coating

TYPICAL APPLICATIONS

- Automatic or Manual Actuated Fire Suppression Systems
- Petrochemical, Oil & Gas Installations
- Tunnels
- Power Generation, Transformer & Transmission Plants
- Flammable Storage
- Hangars & Airport Terminals
- Onshore / Offshore
- Mining

DELUGE PRESSURE REDUCING MODEL 68 DE\EL\HRV\PR

OPERATION

The basic control valve [1] used in this deluge system is a direct-sealing elastomeric diaphragm, hydraulically operated control valve engineered specifically for fire protection systems.

In the standby position, the deluge valve is held closed by the upstream water pressure, trapped in the valve's control chamber. The water pressure enters the control chamber through the priming line ball valve [2], a Y-type strainer [3], a check valve [4] and a T-restrictor [5].

Under fire conditions, the deluge valve opens automatically under any of the following circumstances:

1. A fire alarm control panel (F&G panel) energizes the 3/2-way N.O. solenoid [10] (or de-energizes the coil of a continuously energized ED 100% normally closed solenoid for SIL 3-4 rated systems).
2. The pressure in the wet (hydraulically pressurized) pilot line drops, following bursting of one (or more) of the automatic sprinklers.

When this happens, the pressure in the relay valve [9] drops, causing it to open and allowing the water to begin to drain from the deluge valve's control chamber through the pressure reducing pilot [11]. The deluge valve opens instantly, regulating to a steady, preset downstream pressure, regardless of upstream pressure or flow rate fluctuations. This allows water to flow into the pipeline and through the open sprinklers over the protected area.

Manual emergency actuation is enabled by opening the emergency manual activation valve [6]. When connected through the pressure reducing pilot (upon request), manual actuation causes the deluge valve to regulate the downstream pressure regardless of upstream pressure or flow rate fluctuations. If unspecified, the manual activation valve drains the water to the atmosphere, allowing the deluge valve to open fully. When actuated, the deluge valve opens instantly and allows water to flow into the pipeline and through the open sprinklers over the protected area.

Standby Position

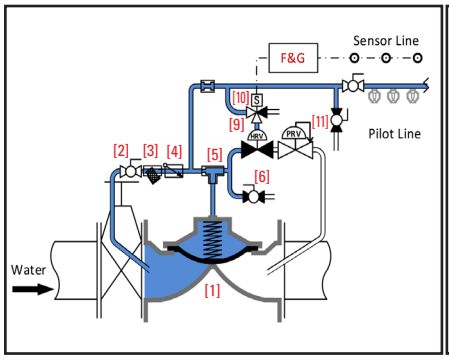

Electrically Actuated & Pressure Reducing

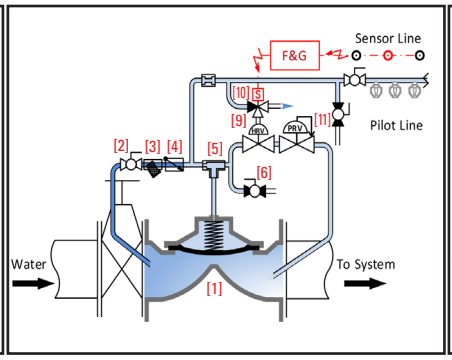

Hydraulically Actuated & Pressure Reducing

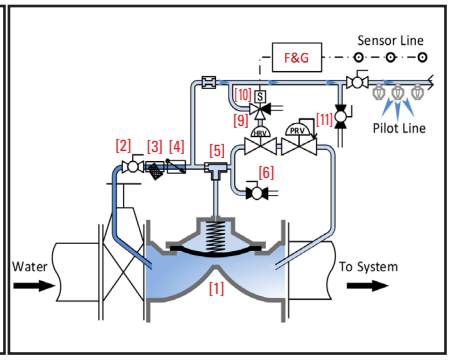

Manually Actuated & Pressure Reducing

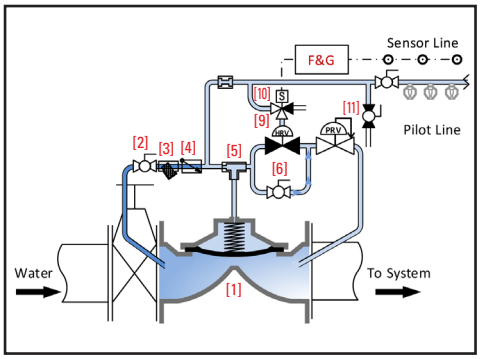

Manually Actuated (Standard)

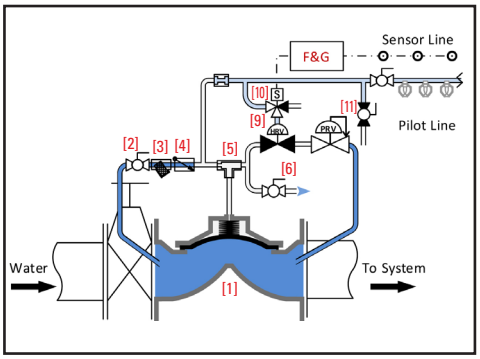

Resetting, maintenance and periodic testing instructions must be followed as described in detail in the applicable OCV IOM (Installation, Operation & Maintenance) Manual.

DELUGE PRESSURE REDUCING MODEL 68 DE\EL\HRV\PR

TYPICAL MATERIALS

ID	Description	Standard	POG [1] Applications
1	Valve Body	See Series 100 Engineering Data [2]	
2	Ball Valve	Bronze, Stainless Steel Ball	Stainless Steel 316
3	Y-Type Strainer	Bronze, Stainless Steel Screen	Stainless Steel 316
4	Check Valve	Bronze	Stainless Steel 316
5	T Restrictor	Brass	Stainless Steel 316
6	Manual Emergency Valve	Bronze	Stainless Steel 316
7	Drip Valve	Brass	Stainless Steel 316
8	Pressure Gauge	Stainless Steel	Stainless Steel 316
9	66-2UL Relay	Brass	Stainless Steel 316
10	3/2 Way N.O. Solenoid [3]	Brass	Stainless Steel 316
11	CXPR Pressure Reducing Pilot	Brass, Stainless Steel 316 Seat	Stainless Steel 316

(1) Petrochemical, Oil & Gas
(2) Refer to materials selection guidelines, Engineering Data - Materials: Ductile Iron A-536 65-45-12; Cast Steel A-216 WCB; Cast Steel A-352 LCB; Austenitic Stainless Steel A-351/CF8M; Super Duplex 2507; Nickel-Aluminum-Bronze B-148 UNS C95800
(3) Consult factory

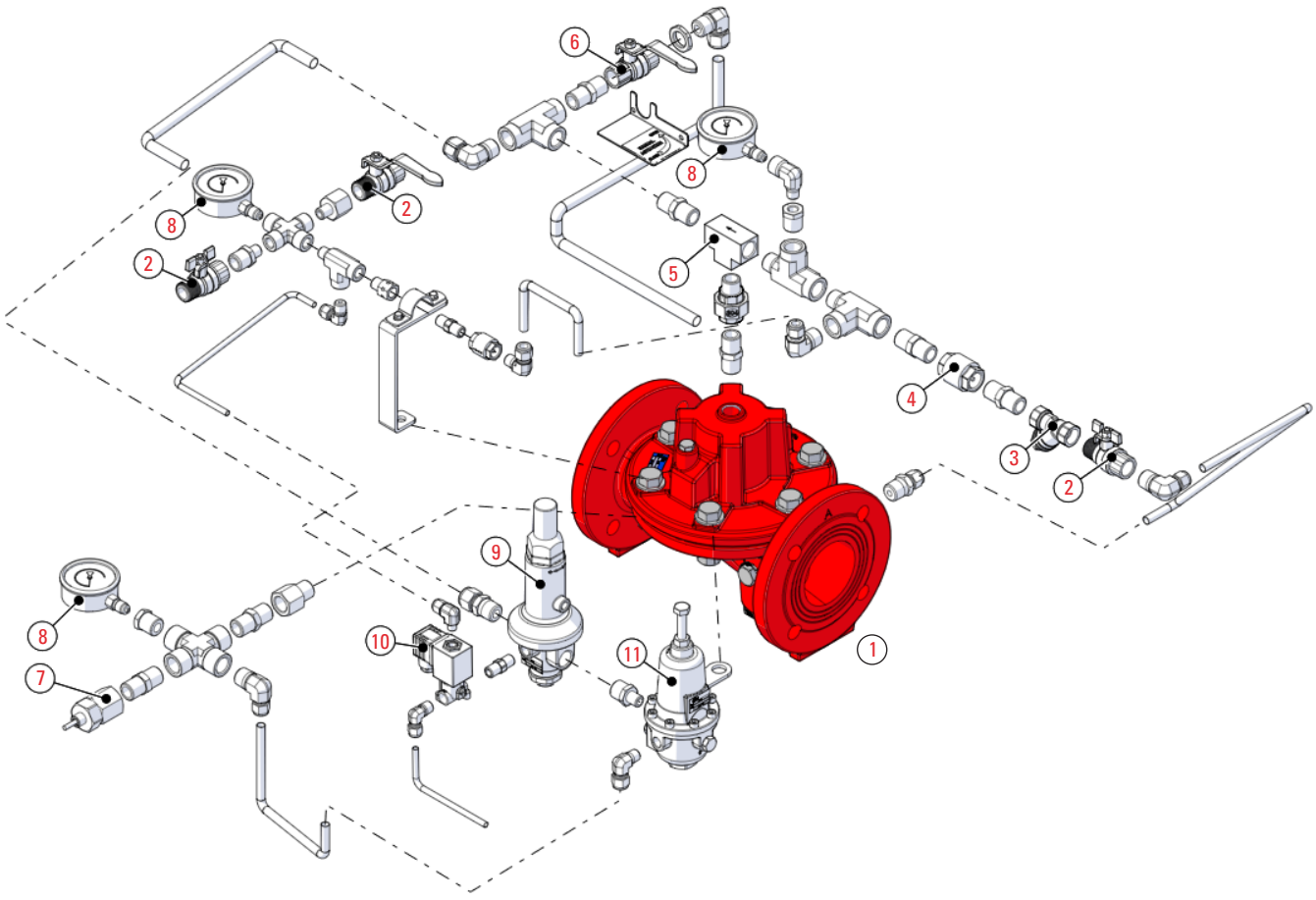

* General representation of valve

DELUGE PRESSURE REDUCING MODEL 68 DE\EL\HRV\PR

GENERAL ARRANGEMENT & DIMENSIONS

Valve	2" (50)		2.5" (65)		3" (80)		4" (100)		6" (150)		8" (200)		10" (250)	
	inch	mm	inch	mm	inch	mm	inch	mm	inch	mm	inch	mm	inch	mm
A	9 5/8	243	9 3/16	233	12 3/16	310	14	356	17 3/16	436	20 7/8	530	25	635
A_G (1)	9 5/8	243	10	253	13 3/16	336	15	380	17 5/16	440	21 7/8	556	N/A	
B	14 13/16	376	14 13/16	376	14 13/16	376	14 13/16	376	14 13/16	376	14 13/16	376	14 13/16	376
C	9 5/8	244	9 5/8	244	9 5/8	244	9 5/8	244	9 5/8	244	10 3/8	265	12 1/2	318
D	10 3/8	264	10 3/8	264	10 7/8	277	11 5/16	288	12 5/8	320	13 5/16	338	14 5/16	364
E	6 11/16	170	6 11/16	170	7 3/16	183	7 5/8	194	8 7/8	226	9 5/8	244	10 5/8	270
F	3 5/16	85	3 5/16	92 1/2	4 1/8	105	4 11/16	120	5 7/8	150	7 1/8	180	8 1/2	215
G	10 5/8	268	10 5/8	268	12 13/16	324	12 13/16	324	16 1/8	409	18 5/8	472	19 1/2	494

* Approximate dimensions
(1) Grooved model length

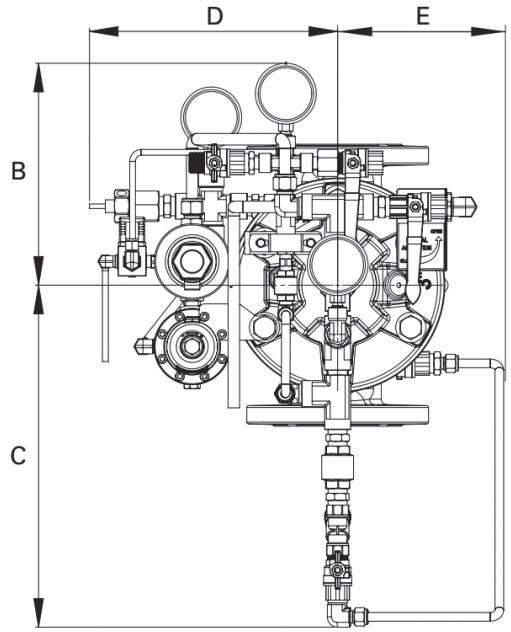

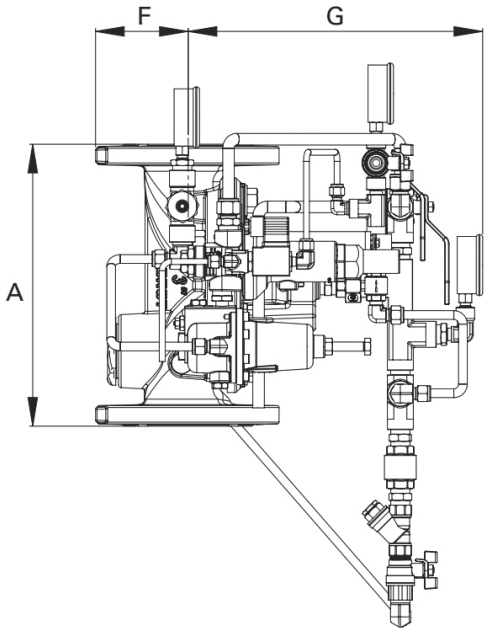

* General representation of valve

DELUGE PRESSURE REDUCING MODEL 68 DE\EL\HRV\PR

TYPICAL INSTALLATION

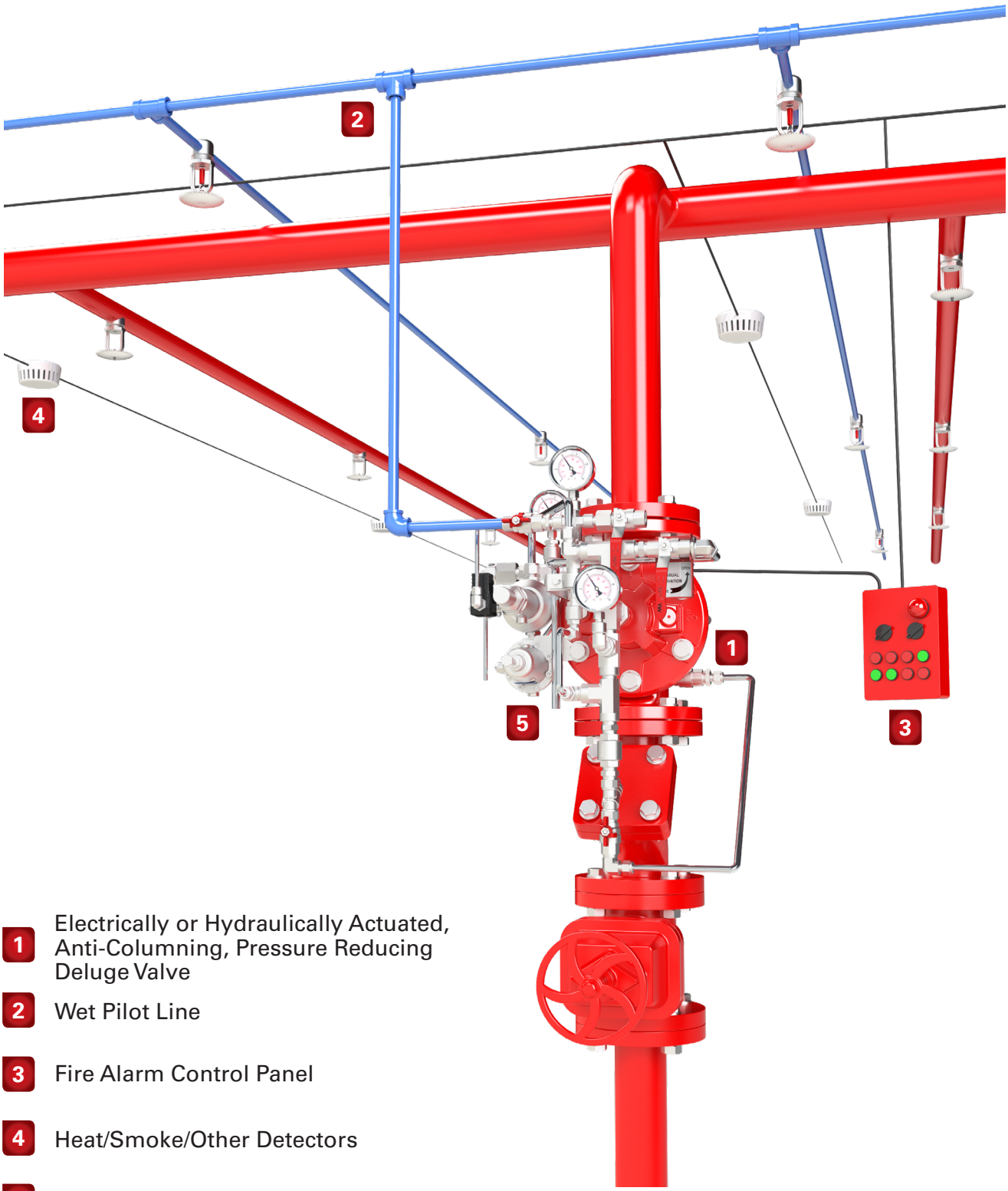

1. Electrically or Hydraulically Actuated, Anti-Columning, Pressure Reducing Deluge Valve
2. Wet Pilot Line
3. Fire Alarm Control Panel
4. Heat/Smoke/Other Detectors
5. CXPR Pressure Reducing Pilot

* Not all items pictured reflect products sold by OCV

DELUGE PRESSURE REDUCING MODEL 68 DE\EL\HRV\PR

TECHNICAL DATA

Temperature:
- Media up to 80°C = 176°F
- Elastomers suitable for extreme climates available upon request

Sizes:
- UL Listed Sizes: Model 68: 2"-10"
- Straight Flow: 2"- 24"

End Connections:
- Flanged:
  ISO-PN16 & ISO-PN25
  ANSI B16.42 & B16.5 Class #150 & #300
  Additional options available upon request
- Grooved:
  Sizes: 2"-8"

Pressure Rating:
- 250 psi for Class #150
- 375 psi for Class #300

Body and Cover Material:
- Ductile Iron
- Cast Steel
- Stainless Steel
- NAB

Trim Material:
- Bronze/Brass - Copper
- Stainless Steel
- Monel

Optional Components:
- Position Indicator
- Pressure Switch
- Alarm Test Trim
- Upstream Drain Valve
- Limit/Proximity Switch

Items to Specify:
- Electrical features other than standard (24VDC, IP65/NEMA4)
- If explosion proof accessories are required such as solenoids, pressure switches, etc., please define classification
- Control trim material other than standard
- Required standards, certifications and approvals

ENGINEERING SPECIFICATIONS

The deluge valve shall be hydraulically operated, direct elastomeric diaphragm-seal, single chamber weir type. The valve shall consist of three major components: the body, the cover and the diaphragm assembly. The diaphragm assembly shall be the only moving part. The diaphragm forms a sealed control chamber in the upper portion of the valve, separating operating pressure from line pressure. Packing glands, stuffing boxes and dynamic O-ring seals are not permitted and there shall not be shafts, discs, bearings or pistons operating the valve. No hourglass shaped disc retainers shall be permitted, and no V-type, U-type or other slotted type disc guides shall be used. The valve shall contain a nylon reinforced rubber diaphragm, elastic & resilient through its entire surface without vulcanized radial seals and/or reinforcements. The diaphragm assembly shall not be guided by any shafts or bearings and shall not be in close contact with other valve parts except for its sealing surface. The deluge valve shall be fully trimmed, hydrostatically and operationally tested at the factory. Maintenance, disassembly and reassembly of all the valve's components shall be made possible on-site and in-line, without the need to remove the valve from the line. Main valve body and bonnet standard material shall be Ductile Iron or Cast Steel. Main valve body and bonnet surfaces shall include a fire red epoxy coating. Other materials and coatings are available upon request. The deluge valve shall be a Model 68 DE\EL\HRV\PR, UL Listed under VLFT category, as manufactured by OCV Fluid Solutions, Tulsa, OK, USA.

OCV companies worldwide reserve the right to make changes without notice including product specification and configuration, content, description(s), dimensions etc. The information herein is subject to change without notice. OCV shall not be held liable for any errors. All rights reserved. © Copyright by OCV.

7400 East 42nd Place • Tulsa, Oklahoma 74145 • USA
Phone: 1-918-627-1942 • Toll Free: 1-888-OCV-VALV (628-8258) • Email: sales@controlvalves.com